Repair - Parts

PR70 and PR70v

312760S

EN

Two Component Liquid Dispensing Systems

Fixed or variable ratio systems. For accurate metering, mixing, and dispensing of two-component materials. For professional use only.

Not approved for use in European explosive atmosphere locations.

3000 psi (21 MPa, 207 bar) Maximum Working Pressure
100 psi (0.7 MPa, 7 bar) Maximum Air Inlet Pressure

Important Safety Instructions
Read all warnings and instructions in all supplied manuals. Save these instructions.

PR70v Shown with Advanced Display Module

PROVEN QUALITY. LEADING TECHNOLOGY.

Contents

Related Manuals 3
Product Configurator 4
Warnings 11
Grounding 14
Pressure Relief Procedure 14
Models with Advanced Display Module 14
Models with Standard Display Module 14
Shutdown 14
Troubleshooting 16
Error Codes (Advanced Display Module) 18
Error Codes (Standard Display Module) 23
Electrical Schematics 25
Repair 29
HydraCheck Kit Installation 29
Air Cylinder Kit Installation 31
Rear Pump Rebuild Kit Installation 33
Piston/Cylinder Replacement Kit Installation . . 35
Check Valve Rebuild Kit Installation 36
Piston Plug Installation 37
Pressure Transducer Installation 37
Flow Meter Installation 38
Fluid Control Module Replacement 39
Fuse Replacement 40
Parts 41
Fixed Ratio Base, LC0262, LC0263, LC0264, LC0265 41
Fixed Ratio Frame Sub-Assembly, LC0290 44
Fixed Ratio Drive Block Assembly, LC0107 45
Variable Ratio Base, LC0242, LC0243, LC0244, LC0245 46
Variable Ratio Frame Sub-Assembly, LC0232 . . 49
Air Cylinder, LC0110, LC0111, LC0230, LC0231 52
Pump Sub-Assembly, LC0112 54
Control Bracket, LC0240, LC0261 56
Incoming Power Bracket, LC0239 58
Piston Package 60
Nylon and UHMW Piston Replacement Kits . . . 63
Controls 64
Applicator Mounting 65
Dispense Valve 66
Mixers 68
Hose Packages 69
Power Cords 76
Flow Monitoring 77
Tank Stands, Assemblies LC0247 and LC0103 79
Heat Zone Assemblies 79
Kits 80
Dimensions 82
Machine with On-Board Tanks 82
Machine with Off-Board Tanks 83
Technical Data 84
Graco Standard Warranty 86
Graco Information 86

Related Manuals

PR70 and PR70v Operation and Parts Manuals	
Part	**Description**
3A0429	PR70 with Standard Display Module Operation and Maintenance Manual
312759	PR70 and PR70v with Advanced Display Module Operation and Maintenance Manual
312760	PR70 and PR70v Repair and Parts Manual
312394	PR70 and PR70v Feed Systems Manual
312761	PR70v Integrated Heat Instructions - Parts Manual
MD2 Dispense Valve Manual	
Part	**Description**
312185	MD2 Dispense Valve Instructions and Parts Manual

Product Configurator

PR7F -	-	-	-	-	-	-	-	-	-	-	-	-	-	-	-	-	-	-
Code:	A	B-C	D-E	F	G-H	I-J	K	L	M	N	O	P	Q	R	S	T	U	V
	Air Motor	High Volume Side Piston	Low Volume Side Piston	Controls	High Volume Side Hose	Low Volume Side Hose	Dispense Valve	Mixer	Applicator Mounting	Power Cord	Flow Monitoring	High Volume Side Tank	High Volume Side Tank Cover	Low Volume Side Tank	Low Volume Side Tank Cover	Tank Level Sensors	Heat Zone Controller	Off-Board Tank Stand

An example of the product configurator would be the following configurator code.

PR7F -	J -	A5 -	A5 -	E -	A6 -	A6 -	3 -	1 -	2 -	A -	N -	3 -	N -	H -	N -	6 -	N -	N
Code:	A	B-C	D-E	F	G-H	I-J	K	L	M	N	O	P	Q	R	S	T	U	V
	Air Motor	High Volume Side Piston	Low Volume Side Piston	Controls	High Volume Side Hose	Low Volume Side Hose	Dispense Valve	Mixer	Applicator Mounting	Power Cord	Flow Monitoring	High Volume Side Tank	High Volume Side Tank Cover	Low Volume Side Tank	Low Volume Side Tank Cover	Tank Level Sensors	Heat Zone Controller	Off-Board Tank Stand

The following part number fields apply for the PR70 and PR70v part numbering configurator fields. Shaded items listed in the configurator table below are “Super Standard” items that are typically stocked and provide the best delivery dates.

Code A	Part	Air Motor
A	LC0262	PR70 with 3.0 in. (4.56 mm) Air Motor
B	LC0264	PR70 with 4.5 in. (10.26 mm) Air Motor
C	LC0263	PR70 with 3.0 in. (4.56 mm) Air Motor and Hydracheck
D	LC0265	PR70 with 4.5 in. (10.26 mm) Air Motor and Hydracheck
F	LC0242	PR70v with 3.0 in. (4.56 mm) Air Motor
G	LC0244	PR70v with 4.5 in. (10.26 mm) Air Motor
H	LC0243	PR70v with 3.0 in. (4.56 mm) Air Motor and Hydracheck
J	LC0245	PR70v with 4.5 in. (10.26 mm) Air Motor and Hydracheck

Code B	Part	High Volume Side Piston and Metering Tube Material
A	LC1___	Nylon Piston, Stainless Steel Metering Tube (last three digits of part number is the mm^2 piston size)
B	LC2___	UHMWPE Piston, Stainless Steel Metering Tube (last three digits of part number is the mm^2 piston size)
C	LC3___	UHMWPE Piston, Ceramic Metering Tube (last three digits of part number is the mm^2 piston size)

Code C	Part	High Volume Piston Size (mm^2)
1		80, Available in Nylon Only
2		100, Available in Nylon Only
3		120, Available in Nylon Only

4		140, Available in Nylon Only
5		160
6		180
7		200
8		220
9		240
A		260
B		280
C		300
F		320
G		360
H		400
J		440
L		480
M		520
R		560
S		600
T		640
U		720
W		800
X		880
Y		960
Z		Custom High Volume side, consult factory (stainless steel only)
Code D	**Part**	**High Volume Side Piston and Metering Tube Material**
A	LC1___	Nylon Piston, Stainless Steel Metering Tube (last three digits of part number is the mm^2 piston size)
B	LC2___	UHMWPE Piston, Stainless Steel Metering Tube (last three digits of part number is the mm^2 piston size)
C	LC3___	UHMWPE Piston, Ceramic Metering Tube (last three digits of part number is the mm^2 piston size)
Code E	**Part**	**Low Volume Side Piston Size (mm^2)**
1		80, Available in Nylon Only
2		100, Available in Nylon Only
3		120, Available in Nylon Only
4		140, Available in Nylon Only
5		160
6		180
7		200
8		220
9		240
A		260
B		280
C		300
F		320
G		360
H		400
J		440
L		480
M		520
R		560
S		600
T		640
U		720
W		800
X		880
Y		960
Z		Custom Low Volume side, consult factory (stainless steel only)
Code F	**Part**	**Controls**
B	LC0272	Standard Display Module with 1 Fluid Control Module
D	LC0274	Advanced Display Module with 1 Fluid Control Module
E	LC0275	Advanced Display Module with 2 Fluid Control Modules
Codes G-H, I-J	**Part**	**High Volume Hose / Low Volume Hose**
A1	LC0801	3/16 in. (4.8 mm) - 2.5 ft (0.6 m)
A2	LC0802	3/16 in. (4.8 mm) - 10 ft (3.0 m)
A3	LC0803	3/16 in. (4.8 mm) - 15 ft (4.6 m)
A4	LC0804	1/4 in. (6.5 mm) - 2.5 ft (0.6 m)
A5	LC0805	1/4 in. (6.5 mm) - 10 ft (3.0 m)
A6	LC0806	1/4 in. (6.5 mm) - 15 ft (4.6 m)
A7	LC0807	3/8 in. (9.5 mm) - 2.5 ft (0.6 m)
A8	LC0808	3/8 in. (9.5 mm) - 10 ft (3.0 m)
A9	LC0809	3/8 in. (9.5 mm) - 15 ft (4.6 m)
AA	LC0810	1/2 in. (13 mm) - 2.5 ft (0.6 m)
AB	LC0811	1/2 in. (13 mm) - 10 ft (3.0 m)
AC	LC0812	1/2 in. (13 mm) - 15 ft (4.6 m)
AG	LC0813	3/4 in. (19 mm) - 10 ft (3.0 m)
AH	LC0814	3/4 in. (19 mm) - 15 ft (4.6 m)
B4	LC0881	Heated, 1/4 in. (6.5 mm) - 2.5 ft (0.6 m)
B5	LC0882	Heated, 1/4 in. (6.5 mm) - 10 ft (3.0 m)
B6	LC0883	Heated, 1/4 in. (6.5 mm) - 15 ft (4.6 m)
B7	LC0884	Heated, 3/8 in. (9.5 mm) - 2.5 ft (0.6 m)
B8	LC0885	Heated, 3/8 in. (9.5 mm) - 10 ft (3.0 m)
B9	LC0886	Heated, 3/8 in. (9.5 mm) - 15 ft (4.6 m)
BA	LC0887	Heated, 1/2 in. (13 mm) - 2.5 ft (0.6 m)
BB	LC0888	Heated, 1/2 in. (13 mm) - 10 ft (3.0 m)
BC	LC0889	Heated, 1/2 in. (13 mm) - 15 ft (4.6 m)
BG	LC0890	Heated, 3/4 in. (19 mm) - 10 ft (3.0 m)
BH	LC0891	Heated, 3/4 in. (19 mm) - 15 ft (4.6 m)
C1	LC0161	Recirculating, On-Board Tanks, 3/16 in. (4.8 mm) - 2.5 ft (0.6 m)
C2	LC0162	Recirculating, On-Board Tanks, 3/16 in. (4.8 mm) - 10 ft (3.0 m)

C3	LC0163	Recirculating, On-Board Tanks, 3/16 in. (4.8 mm) - 15 ft (4.6 m)
C4	LC0164	Recirculating, On-Board Tanks, 1/4 in. (6.5 mm) - 2.5 ft (0.6 m)
C5	LC0165	Recirculating, On-Board Tanks, 1/4 in. (6.5 mm) - 10 ft (3.0 m)
C6	LC0166	Recirculating, On-Board Tanks, 1/4 in. (6.5 mm) - 15 ft (4.6 m)
C7	LC0167	Recirculating, On-Board Tanks, 3/8 in. (9.5 mm) - 2.5 ft (0.6 m)
C8	LC0168	Recirculating, On-Board Tanks, 3/8 in. (9.5 mm) - 10 ft (3.0 m)
C9	LC0169	Recirculating, On-Board Tanks, 3/8 in. (9.5 mm) - 15 ft (4.6 m)
CA	LC0170	Recirculating, On-Board Tanks, 1/2 in. (13 mm) - 2.5 ft (0.6 m)
CB	LC0171	Recirculating, On-Board Tanks, 1/2 in. (13 mm) - 10 ft (3.0 m)
CC	LC0172	Recirculating, On-Board Tanks, 1/2 in. (13 mm) - 15 ft (4.6 m)
CD	LC0173	Recirculating, On-Board Tanks, 3/4 in. (19 mm) - 10 ft (3.0 m)
CE	LC0174	Recirculating, On-Board Tanks, 3/4 in. (19 mm) - 15 ft (4.6 m)
D1	LC0175	Recirculating, Off-Board Tanks, 3/16 in. (4.8 mm) - 2.5 ft (0.6 m)
D2	LC0176	Recirculating, Off-Board Tanks, 3/16 in. (4.8 mm) - 10 ft (3.0 m)
D3	LC0177	Recirculating, Off-Board Tanks, 3/16 in. (4.8 mm) - 15 ft (4.6 m)
D4	LC0178	Recirculating, Off-Board Tanks, 1/4 in. (6.5 mm) - 2.5 ft (0.6 m)
D5	LC0179	Recirculating, Off-Board Tanks, 1/4 in. (6.5 mm) - 10 ft (3.0 m)
D6	LC0180	Recirculating, Off-Board Tanks, 1/4 in. (6.5 mm) - 15 ft (4.6 m)
D7	LC0181	Recirculating, Off-Board Tanks, 3/8 in. (9.5 mm) - 2.5 ft (0.6 m)
D8	LC0182	Recirculating, Off-Board Tanks, 3/8 in. (9.5 mm) - 10 ft (3.0 m)
D9	LC0183	Recirculating, Off-Board Tanks, 3/8 in. (9.5 mm) - 15 ft (4.6 m)
DA	LC0184	Recirculating, Off-Board Tanks, 1/2 in. (13 mm) - 2.5 ft (0.6 m)
DB	LC0185	Recirculating, Off-Board Tanks, 1/2 in. (13 mm) - 10 ft (3.0 m)
DC	LC0186	Recirculating, Off-Board Tanks, 1/2 in. (13 mm) - 15 ft (4.6 m)
DD	LC0187	Recirculating, Off-Board Tanks, 3/4 in. (19 mm) - 10 ft (3.0 m)
DE	LC0188	Recirculating, Off-Board Tanks, 3/4 in. (19 mm) - 15 ft (4.6 m)
E1	LC0190	Recirculating, Heated, On-Board Tanks, 1/4 in. (6.5 mm) - 2.5 ft (0.6 m)
E2	LC0191	Recirculating, Heated, On-Board Tanks, 1/4 in. (6.5 mm) - 10 ft (3.0 m)
E3	LC0192	Recirculating, Heated, On-Board Tanks, 1/4 in. (6.5 mm) - 15 ft (4.6 m)
E4	LC0193	Recirculating, Heated, On-Board Tanks, 3/8 in. (9.5 mm) - 2.5 ft (0.6 m)
E5	LC0194	Recirculating, Heated, On-Board Tanks, 3/8 in. (9.5 mm) - 10 ft (3.0 m)
E6	LC0195	Recirculating, Heated, On-Board Tanks, 3/8 in. (9.5 mm) - 15 ft (4.6 m)
E7	LC0196	Recirculating, Heated, On-Board Tanks, 1/2 in. (13 mm) - 2.5 ft (0.6 m)
E8	LC0197	Recirculating, Heated, On-Board Tanks, 1/2 in. (13 mm) - 10 ft (3.0 m)
E9	LC0198	Recirculating, Heated, On-Board Tanks, 1/2 in. (13 mm) - 15 ft (4.6 m)
EA	LC0199	Recirculating, Heated, On-Board Tanks, 3/4 in. (19 mm) - 10 ft (3.0 m)
EB	LC0200	Recirculating, Heated, On-Board Tanks, 3/4 in. (19 mm) - 15 ft (4.6 m)
F1	LC0201	Recirculating, Heated, Off-Board Tanks, 1/4 in. (6.5 mm) - 2.5 ft (0.6 m)
F2	LC0202	Recirculating, Heated, Off-Board Tanks, 1/4 in. (6.5 mm) - 10 ft (3.0 m)
F3	LC0203	Recirculating, Heated, Off-Board Tanks, 1/4 in. (6.5 mm) - 15 ft (4.6 m)
F4	LC0204	Recirculating, Heated, Off-Board Tanks, 3/8 in. (9.5 mm) - 2.5 ft (0.6 m)
F5	LC0205	Recirculating, Heated, Off-Board Tanks, 3/8 in. (9.5 mm) - 10 ft (3.0 m)
F6	LC0206	Recirculating, Heated, Off-Board Tanks, 3/8 in. (9.5 mm) - 15 ft (4.6 m)
F7	LC0207	Recirculating, Heated, Off-Board Tanks, 1/2 in. (13 mm) - 2.5 ft (0.6 m)
F8	LC0208	Recirculating, Heated, Off-Board Tanks, 1/2 in. (13 mm) - 10 ft (3.0 m)
F9	LC0209	Recirculating, Heated, Off-Board Tanks, 1/2 in. (13 mm) - 15 ft (4.6 m)
FA	LC0210	Recirculating, Heated, Off-Board Tanks, 3/4 in. (19 mm) - 10 ft (3.0 m)
FB	LC0211	Recirculating, Heated, Off-Board Tanks, 3/4 in. (19 mm) - 15 ft (4.6 m)
GA	LC0400	High Pressure, 3/8 in. (9.5 mm) - 2.5 ft (0.6 m)
GB	LC0401	High Pressure, 3/8 in. (9.5 mm) - 10 ft (3.0 m)
GC	LC0402	High Pressure, 3/8 in. (9.5 mm) - 15 ft (4.6 m)
GD	LC0403	High Pressure, 1/2 in. (13 mm) - 2.5 ft (0.6 m)
GE	LC0404	High Pressure, 1/2 in. (13 mm) - 10 ft (3.0 m)
GF	LC0405	High Pressure, 1/2 in. (13 mm) - 15 ft (4.6 m)

GH	LC0406	High Pressure, 3/4 in. (19 mm) - 10 ft (3.0 m)
GJ	LC0407	High Pressure, 3/4 in. (19 mm) - 15 ft (4.6 m)
GK	LC0432	High Pressure, Recirculating, On-Board Tanks, 3/8 in. (9.5 mm) - 2.5 ft (0.6 m)
GL	LC0433	High Pressure, Recirculating, On-Board Tanks, 3/8 in. (9.5 mm) - 10 ft (3.0 m)
GM	LC0434	High Pressure, Recirculating, On-Board Tanks, 3/8 in. (9.5 mm) - 15 ft (4.6 m)
GQ	LC0435	High Pressure, Recirculating, On-Board Tanks, 1/2 in. (13 mm) - 2.5 ft (0.6 m)
GR	LC0436	High Pressure, Recirculating, On-Board Tanks, 1/2 in. (13 mm) - 10 ft (3.0 m)
GS	LC0437	High Pressure, Recirculating, On-Board Tanks, 1/2 in. (13 mm) - 15 ft (4.6 m)
GT	LC0438	High Pressure, Recirculating, On-Board Tanks, 3/4 in. (19 mm) - 10 ft (3.0 m)
GU	LC0439	High Pressure, Recirculating, On-Board Tanks, 3/4 in. (19 mm) - 15 ft (4.6 m)
GW	LC0440	High Pressure, Recirculating, On-Board Tanks, 3/8 in. (9.5 mm) - 2.5 ft (0.6 m)
GX	LC0441	High Pressure, Recirculating, On-Board Tanks, 3/8 in. (9.5 mm) - 10 ft (3.0 m)
GY	LC0442	High Pressure, Recirculating, On-Board Tanks, 3/8 in. (9.5 mm) - 15 ft (4.6 m)
G1	LC0443	High Pressure, Recirculating, On-Board Tanks, 1/2 in. (13 mm) - 2.5 ft (0.6 m)
G2	LC0444	High Pressure, Recirculating, On-Board Tanks, 1/2 in. (13 mm) - 10 ft (3.0 m)
G3	LC0445	High Pressure, Recirculating, On-Board Tanks, 1/2 in. (13 mm) - 15 ft (4.6 m)
G4	LC0446	High Pressure, Recirculating, On-Board Tanks, 3/4 in. (19 mm) - 10 ft (3.0 m)
G5	LC0447	High Pressure, Recirculating, On-Board Tanks, 3/4 in. (19 mm) - 15 ft (4.6 m)
HA	LC0472	High Pressure, Heated, 3/8 in. (9.5 mm) - 2.5 ft (0.6 m)
HB	LC0473	High Pressure, Heated, 3/8 in. (9.5 mm) - 10 ft (3.0 m)
HC	LC0474	High Pressure, Heated, 3/8 in. (9.5 mm) - 15 ft (4.6 m)
HF	LC0475	High Pressure, Heated, 1/2 in. (13 mm) - 2.5 ft (0.6 m)
HG	LC0476	High Pressure, Heated, 1/2 in. (13 mm) - 10 ft (3.0 m)
HJ	LC0477	High Pressure, Heated, 1/2 in. (13 mm) - 15 ft (4.6 m)
HL	LC0478	High Pressure, Heated, 3/4 in. (19 mm) - 10 ft (3.0 m)
HM	LC0479	High Pressure, Heated, 3/4 in. (19 mm) - 15 ft (4.6 m)
HQ	LC0480	High Pressure, Heated, 3/8 in. (9.5 mm) - 2.5 ft (0.6 m)
HR	LC0481	High Pressure, Heated, 3/8 in. (9.5 mm) - 10 ft (3.0 m)
HS	LC0482	High Pressure, Heated, 3/8 in. (9.5 mm) - 15 ft (4.6 m)
HT	LC0483	High Pressure, Heated, 1/2 in. (13 mm) - 2.5 ft (0.6 m)
HU	LC0484	High Pressure, Heated, 1/2 in. (13 mm) - 10 ft (3.0 m)
HX	LC0485	High Pressure, Heated, 1/2 in. (13 mm) - 15 ft (4.6 m)
HY	LC0486	High Pressure, Heated, 3/4 in. (19 mm) - 10 ft (3.0 m)
H2	LC0487	High Pressure, Heated, 3/4 in. (19 mm) - 15 ft (4.6 m)
NN	---	Not required

Code K	Part	Dispense Valve
N	N/A	None
2	255179	MD2, Valve Only with 1:1 Nose
3	255181	MD2, Valve Only with 10:1 Nose
4	LC0120	MD2, Handheld with 1:1 Nose
5	LC0122	MD2, Handheld with 10:1 Nose
6	LC0121	MD2, Lever with 1:1 Nose
7	LC0123	MD2, Lever with 10:1 Nose

Code L	Part	Mixer Type
N	N/A	None
1	LC0063	3/16 in. (4.8 mm) x 32
2	LC0057	1/4 in. (6.4 mm) x 24
3	LC0058	3/8 in. (9.5 mm) x 24
4	LC0059	3/8 in. (9.5 mm) x 36
5	LC0060	3/8 in. (9.5 mm) Combo
6	LC0062	1/4 in. (6.4 mm) x 24 Luer Lock
7	LC0061	3/16 in. (4.8 mm) x 32 Luer Lock
8	LC0295	1/2 in. (12.7 mm) x 24
9	LC0296	1/2 in. (12.7 mm) x 36

Code M	Part	Applicator Mounting
N	LC0294	None, Customer Mount Controls and Applicator
1	LC0292	Mast Mount, Controls & MD2 Applicator Machine Mounted
2	LC0293	Mast Mount, Controls Only
3	256439	Tank Stand Mount, Controls & MD2 Applicator Machine Mounted
4	256438	Tank Stand Mount, Controls Only

Code N	Part	Power Cord Option
1	121055	120VAC North American Cord Set
2	121054	10A, 250V US Cord Set
3	121056	10A, 250V Continental europe
4	121057	10A, 250V U.K./Ireland
5	121058	10A, 250V Israel
6	124864	10A, 250V Australia
7	124861	10A, 250V Italy
8	124863	10A, 250V Switzerland
9	124862	10A, 250V Denmark
A	121060	10A, 250V India
B	N/A	Heat Controller Option

Code O	Part	Flow Monitoring
N	LC0041	None
1	257433	Pressure Transducer
2	LC0302	Two 0.5 gpm Flow Meters, No Pressure Transducers
3	LC0305	Two 1.0 gpm Flow Meters, No Pressure Transducers
4	LC0303	One 1.0 gpm Flow Meter, One 0.5 gpm Flow Meter, No Pressure Transducers
5	LC0307	Two 2.0 gpm Flow Meters, No Pressure Transducers
6	LC0306	One 2.0 gpm Flow Meter, One 1.0 gpm Flow Meter, No Pressure Transducers
7	LC0304	One 2.0 gpm Flow Meter, One 0.5 gpm Flow Meter, No Pressure Transducers
A	LC0312	Two 0.5 gpm Flow Meters, With Pressure Transducers
B	LC0315	Two 1.0 gpm Flow Meters, With Pressure Transducers
C	LC0313	One 1.0 gpm Flow Meter, One 0.5 gpm Flow Meter, With Pressure Transducers
D	LC0317	Two 2.0 gpm Flow Meters, With Pressure Transducers
E	LC0316	One 2.0 gpm Flow Meter, One 1.0 gpm Flow Meter, With Pressure Transducers
F	LC0314	One 2.0 gpm Flow Meter, One 0.5 gpm Flow Meter, With Pressure Transducers

Code P	Part	High Volume Side Tank
N	N/A	None
1	256896	No Tanks, 1 1/2 in. npt flange
2	255241	8 L, Twin Polyethylene Tanks and Lids
3	255250	8 L, Twin Polyethylene Tanks and Lids, One 120V Agitator
4	255251	8 L, Twin Polyethylene Tanks and Lids, Two 120V Agitators
5	255281	8 L, Twin Polyethylene Tanks and Lids, with Shut-Off Valves
6	255282	8 L, Twin Polyethylene Tanks and Lids, One 120V Agitator, with Shut-Off Valves
7	255283	8 L, Twin Polyethylene Tanks and Lids, Two 120V Agitators, with Shut-Off Valves
8	LC0235★	7.5 L, Stainless Steel, High Level Sensors
9	LC0236★	7.5 L, Stainless Steel, High Level Sensors, with Shut-Off Valve
A	LC0013★	3 L, Stainless Steel
B	LC0012★	7.5 L, Stainless Steel
C	255285★	3 L, Stainless Steel, with Shut-Off Valve
D	LC0156	8 L, Twin Polyethylene Tanks and Lids, One Pneumatic Agitator
E	LC0157	8 L, Twin Polyethylene Tanks and Lids, Two Pneumatic Agitator
F	255284★	7.5 L, Stainless Steel, with Shut-Off Valve
G	LC0254★	7.5 L, Stainless Steel, 240V Heat
H	LC0255★	7.5 L, Stainless Steel, 240V Heat, with Shut-Off Valve
J	LC0054	30 L, Stainless Steel
K	LC0158	8 L, Twin Polyethylene Tanks and Lids, One Pneumatic Agitator, with Shut-Off Valves
L	LC0259	30 L, Stainless Steel, 240V Heat
M	LC0055	60 L, Stainless Steel
P	LC0159	8 L, Twin Polyethylene Tanks and Lids, Two Pneumatic Agitators, with Shut-Off Valves
R	LC0260	60 L, Stainless Steel, 240V Heat
S	LC0126	8 L, Twin Polyethylene Tanks and Lids, One 240V Agitator
T	LC0127	8 L, Twin Polyethylene Tanks and Lids, Two 240V Agitators
U	LC0128	8 L, Twin Polyethylene Tanks and Lids, One 240V Agitator, with Shut-Off Valves
V	LC0238★	7.5 L, Stainless Steel, High Level Sensors, 240V Heat, with Shut-Off Valve

W	LC0129	8 L, Twin Polyethylene Tanks and Lids, Two 240V Agitators, with Shut-Off Valves
X	LC0160	Accumulator, Fluoroelastomer
Y	LC0297	Accumulator, EP
Z	LC0237★	7.5 L, Stainless Steel, High Level Sensors, 240V Heat
---	★	When ordering tanks for spare or replacement parts, refer to **Parts** section of the PR70 and PR70v Feed Systems manual.
Code Q	**Part**	**High Volume Side Tank Cover**
N	N/A	None
1	LC0018	On-Board Dust Cover
2	LC0019	On-Board Clamp Down
3	LC0020	On-Board Vacuum De-gas
4	LC0021	On-Board Agitate 120VAC 50/60 Hz
5	LC0022	On-Board Agitate 240VAC 50/60 Hz
6	LC0023	On-Board Agitate 120 VAC 50/60 Hz and De-gas
7	LC0024	On-Board Agitate 240 VAC 50/60 Hz and De-gas
8	LC0025	On-Board 120VAC 50/60 Hz, De-gas and Fill-Port
9	LC0026	On-Board 240 VAC 50/60 Hz, De-gas and Fill-Port
A	LC0142	Off-Board Clamp Down - 30L
B	LC0101	Off-Board Clamp Down - 60L
C	LC0043	Off-Board Vacuum De-gas - 30L
F	LC0102	Off-Board Vacuum De-gas - 60L
G	LC0047	Off-Board Electric Agitator - 30L
H	LC0048	Off-Board Electric Agitator - 60L
K	LC0147	Off-Board Vacuum De-gas, Pneumatic Agitator, Fill Port, Slinger - 60 L
M	LC0051	Off-Board Vacuum De-gas, Electric Agitator, Fill Port, Slinger - 30 L
R	LC0052	Off-Board Vacuum De-gas, Electric Agitator, Fill Port, Slinger - 60 L
S	LC0130	On-Board, Pneumatic Agitate
T	LC0131	On-Board, Pneumatic Agitate, De-gas
U	LC0132	On-Board, Pneumatic Agitate, De-gas, Fill Port
V	LC0142	Off-Board Pneumatic Agitator - 30 L
W	LC0143	Off-Board Pneumatic Agitator - 60 L
Z	LC0146	Off-Board Vacuum De-gas, Pneumatic Agitator, Fill Port, Slinger - 30 L
Code R	**Part**	**Low Volume Side Tank**
N	N/A	None
1	256896	No Tanks, 1 1/2 in. npt flange
8	LC0235★	7.5 L, Stainless Steel, High Level Sensors
9	LC0236★	7.5 L, Stainless Steel, High Level Sensors, with Shut-Off Valve
A	LC0013★	3 L, Stainless Steel
B	LC0012★	7.5 L, Stainless Steel
C	255285★	3 L, Stainless Steel, with Shut-Off Valve
F	255284★	7.5 L, Stainless Steel, with Shut-Off Valve
G	LC0254★	7.5 L, Stainless Steel, 240V Heat
H	LC0255★	7.5 L, Stainless Steel, 240V Heat, with Shut-Off Valve
J	LC0054	30 L, Stainless Steel
L	LC0259	30 L, Stainless Steel, 240V Heat
M	LC0055	60 L, Stainless Steel
R	LC0260	60 L, Stainless Steel, 240V Heat
V	LC0238★	7.5 L, Stainless Steel, High Level Sensors, 240V Heat, with Shut-Off Valve
X	LC0160	Accumulator, Fluoroelastomer
Y	LC0297	Accumulator, EP
Z	LC0237★	7.5 L, Stainless Steel, High Level Sensors, 240V Heat
---	★	When ordering tanks for spare or replacement parts, refer to **Parts** section of the PR70 and PR70v Feed Systems manual.
Code S	**Part**	**Low Volume Side Tank Covers**
N	N/A	None
1	LC0018	On-Board Dust Cover
2	LC0019	On-Board Clamp Down
3	LC0020	On-Board Vacuum De-gas
4	LC0021	On-Board Agitate 120VAC 50/60 Hz
5	LC0022	On-Board Agitate 240VAC 50/60 Hz
6	LC0023	On-Board Agitate 120 VAC 50/60 Hz and De-gas
7	LC0024	On-Board Agitate 240 VAC 50/60 Hz and De-gas
8	LC0025	On-Board 120VAC 50/60 Hz, De-gas and Fill-Port
9	LC0026	On-Board 240 VAC 50/60 Hz, De-gas and Fill-Port
A	LC0142	Off-Board Clamp Down - 30L
B	LC0101	Off-Board Clamp Down - 60L
C	LC0043	Off-Board Vacuum De-gas - 30L
F	LC0102	Off-Board Vacuum De-gas - 60L
G	LC0047	Off-Board Electric Agitator - 30L
H	LC0048	Off-Board Electric Agitator - 60L
K	LC0147	Off-Board Vacuum De-gas, Pneumatic Agitator, Fill Port, Slinger - 60 L
M	LC0051	Off-Board Vacuum De-gas, Electric Agitator, Fill Port, Slinger - 30 L

R	LC0052	Off-Board Vacuum De-gas, Electric Agitator, Fill Port, Slinger - 60 L
S	LC0130	On-Board, Pneumatic Agitate
T	LC0131	On-Board, Pneumatic Agitate, De-gas
U	LC0132	On-Board, Pneumatic Agitate, De-gas, Fill Port
V	LC0142	Off-Board Pneumatic Agitator - 30 L
W	LC0143	Off-Board Pneumatic Agitator - 60 L
Z	LC0146	Off-Board Vacuum De-gas, Pneumatic Agitator, Fill Port, Slinger - 30 L
Code T	**Part**	**Tank Level Sensors**
N	N/A	None
2	LC0278	Polyethylene Tanks - Low Level Sensors Only
3	LC0279	Two 7.5 L Stainless Steel Tanks - Low Level Sensors Only
4	LC0282	Two 30 L or 60 L Stainless Steel Tanks - Low Level Sensors Only
5	LC0281	7.5 L Stainless Steel - Low Level Sensors Only, and 30 L or 60 L Stainless Steel - Low Level Sensors Only
6	LC0280	Accumulator Sensors, and 7.5 L Low Level Sensors
7	LC0283	Accumulator Sensors, and 30 L or 60 L Low Level Sensors
9	LC0284	Two 7.5 L Stainless Steel Tanks - High and Low Level Sensors with Refill Logic
A	LC0287	Two 30 L or 60 L Stainless Steel Tanks - High and Low Level Sensors with Refill Logic
B	LC0286	7.5 L Stainless Steel - Low Level Sensors, and 30 L or 60 L Stainless Steel - High and Low Level Sensors with Refill Logic
C	LC0289	7.5 L Stainless Steel - High and Low Level Sensors with Refill Logic, and 30 L or 60 L Stainless Steel - High and Low Level Sensors with Refill Logic
D	LC0285	Accumulator Sensors, and 7.5 L High and Low Level Sensors
E	LC0288	Accumulator Sensors, and 30 L or 60 L High and Low Level Sensors
G	N/A	Two Sets of Accumulator Sensors

Code U	Part	Heat Zone Controller
N	N/A	None
C	LC0250	1 Tank or 1 Hose
D	LC0251	2 Tanks, 1 Tank and 1 Hose, or 2 Hoses
E	LC0252	2 Tanks and 1 Hose, or 1 Tank and 2 Hoses
F	LC0253	2 Tanks and 2 Hoses
Code V	**Part**	**Off-Board Tank Stands**
N	N/A	None
2	LC0103	PR70 Tank Stand
3	LC0247	PR70v Tank Stand

Warnings

The following warnings are for the setup, use, grounding, maintenance, and repair of this equipment. The exclamation point symbol alerts you to a general warning and the hazard symbol refers to procedure-specific risk. Refer back to these warnings. Additional, product-specific warnings may be found throughout the body of this manual where applicable.

⚠ WARNING	
	ELECTRIC SHOCK HAZARD Improper grounding, setup, or usage of the system can cause electric shock. • Turn off and disconnect power cord before servicing equipment. • Use only grounded electrical outlets. • Use only 3-wire extension cords. • Ensure ground prongs are intact on power and extension cords. • Do not expose to rain. Store indoors.
	SKIN INJECTION HAZARD High-pressure fluid from dispense valve, hose leaks, or ruptured components will pierce skin. This may look like just a cut, but it is a serious injury that can result in amputation. **Get immediate surgical treatment.** • Do not point dispense valve at anyone or at any part of the body. • Do not put your hand over the end of the dispense nozzle. • Do not stop or deflect leaks with your hand, body, glove, or rag. • Follow **Pressure Relief Procedure** in this manual, when you stop spraying and before cleaning, checking, or servicing equipment.
	TOXIC FLUID OR FUMES HAZARD Toxic fluids or fumes can cause serious injury or death if splashed in the eyes or on skin, inhaled, or swallowed. • Read MSDS's to know the specific hazards of the fluids you are using. • Store hazardous fluid in approved containers, and dispose of it according to applicable guidelines. • Always wear impervious gloves when spraying or cleaning equipment.
	PERSONAL PROTECTIVE EQUIPMENT You must wear appropriate protective equipment when operating, servicing, or when in the operating area of the equipment to help protect you from serious injury, including eye injury, inhalation of toxic fumes, burns, and hearing loss. This equipment includes but is not limited to: • Protective eyewear • Clothing and respirator as recommended by the fluid and solvent manufacturer • Gloves • Hearing protection

⚠ WARNING

FIRE AND EXPLOSION HAZARD

Flammable fumes, such as solvent and paint fumes, in work area can ignite or explode. To help prevent fire and explosion:

- Use equipment only in well ventilated area.
- Eliminate all ignition sources; such as pilot lights, cigarettes, portable electric lamps, and plastic drop cloths (potential static arc).
- Keep work area free of debris, including solvent, rags and gasoline.
- Do not plug or unplug power cords or turn lights on or off when flammable fumes are present.
- Ground all equipment in the work area. See **Grounding** instructions.
- If there is static sparking or you feel a shock, **stop operation immediately.** Do not use equipment until you identify and correct the problem.
- Keep a working fire extinguisher in the work area.

EQUIPMENT MISUSE HAZARD

Misuse can cause death or serious injury.

- Do not operate the unit when fatigued or under the influence of drugs or alcohol.
- Do not exceed the maximum working pressure or temperature rating of the lowest rated system component. See **Technical Data** in all equipment manuals.
- Use fluids and solvents that are compatible with equipment wetted parts. See **Technical Data** in all equipment manuals. Read fluid and solvent manufacturer's warnings. For complete information about your material, request MSDS forms from distributor or retailer.
- Check equipment daily. Repair or replace worn or damaged parts immediately with genuine manufacturer's replacement parts only.
- Do not alter or modify equipment.
- Use equipment only for its intended purpose. Call your distributor for information.
- Route hoses and cables away from traffic areas, sharp edges, moving parts, and hot surfaces.
- Do not kink or over bend hoses or use hoses to pull equipment.
- Keep children and animals away from work area.
- Comply with all applicable safety regulations.

MOVING PARTS HAZARD

Moving parts can pinch or amputate fingers and other body parts.

- Keep clear of moving parts.
- Do not operate equipment with protective guards or covers removed.
- Pressurized equipment can start without warning. Before checking, moving, or servicing equipment, follow the **Pressure Relief Procedure** in this manual. Disconnect power or air supply.

BURN HAZARD

Equipment surfaces and fluid that's heated can become very hot during operation. To avoid severe burns, do not touch hot fluid or equipment. Wait until equipment/fluid has cooled completely.

Grounding

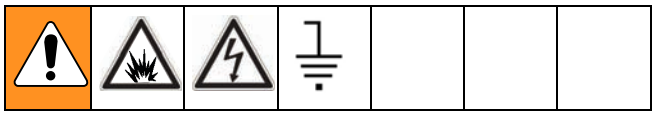

This product must be grounded. In the event of an electrical short circuit, grounding reduces the risk of electric shock by providing an escape wire for the electric current. This product is equipped with a cord having a grounding wire with an appropriate grounding plug. The plug must be plugged into an outlet that is properly installed and grounded in accordance with all local codes and ordinances.

Improper installation of the grounding plug is able to result in a risk of electric shock. When repair or replacement of the cord or plug is required, do not connect the grounding wire to either flat blade terminal. The wire with insulation having an outer surface that is green with or without yellow stripes is the grounding wire. Do not modify the plug provided; if it does not fit the outlet, have the proper outlet installed by a qualified electrician. Only connect the product to an outlet having the same configuration as the plug. Do not use an adapter with this product.

Pressure Relief Procedure

Models with Advanced Display Module

1. Place a waste container below the dispense valve.
2. Navigate to the Manual screen.
3. Press the Open Dispense Valve button on the Manual screen to relieve chemical pressure.
4. Press the Machine Disable Mode button ( ).
5. Press the system air pressure relief switch down to stop air supply and to vent air pressure in the machine. It is the yellow tab at the left, rear of the machine. The hole in the tab should be visible.
6. If necessary, run a lock through the hole to lock the tab in place. This prevents the system air pressure from being inadvertently enabled.

Models with Standard Display Module

With the machine in an idle state:

1. If the machine pistons are not fully retracted, retract the pistons by pressing in the M1 screen. See manual 3A0429 for more information.
2. Manually open the dispense valve by pressing the third M1 soft key until the "" ICON is shown in the Current DV field. See manual 3A0429 for more information.
3. Press the system air pressure relief switch down to stop air supply and to vent air pressure in the machine. It is the yellow tab at the left, rear of the machine. The hole in the tab should be visible.
4. If necessary, run a lock through the hole to lock the tab in place. This prevents the system air pressure from being inadvertently enabled.

Shutdown

If the machine is to remain idle for an extended period of time, perform the following steps.

1. Place a waste container below the dispense valve.
2. If installed, remove static mixer from the end of the dispense valve.

3. Place a container below the dispense valve and activate a small shot to flush mixed material out of the valve.
4. Relieve pressure. See **Pressure Relief Procedure**.
5. With a clean rag and cotton swabs, clean the end of the dispense valve.
6. Install nightcap on the dispense valve.

Troubleshooting

Before starting any troubleshooting procedures, perform the following procedure.

1. Relieve pressure. See **Pressure Relief Procedure**, page 14.
2. Disconnect AC power from the machine.
3. Allow the machine to cool if the machine has a heat control option.

Try the recommended solutions in the order given for each problem to avoid unnecessary repairs. Verify all circuit breakers, switches, and controls are properly set and wiring is correct.

Problem	Cause	Solution
Display Module completely dark	No power	Verify rear AC Power switch is ON.
	Fuse blown	Replace machine fuses.
	Loose connection	Tighten 5-pin cable on Display Module.
	Bad display module	Replace Display Module.
No or incorrect amount of material dispensed from either side.	Ball valve closed (if installed)	Open tank ball valve.
	Tank empty	Fill tank with material.
	Tank clogged	Verify no obstruction in the tank.
	Air in material	Prime the machine until the air is removed.
	Check valve malfunction	Remove; clean or replace check valve.
	Piston worn or broken	Remove and replace piston if worn.
Piston stalled	Input air reduced or removed	Reconnect input air line to machine. Increase air pressure regulator adjustment.
	Mixer blocked	Replace static mixer. Incorporate purge timer or decrease purge timer delay to prevent mixer blockage.
	Open Dispense Valve (ODV) adjustment too late	Readjust the ODV setting to occur sooner.
	Blocked check valve	Remove check valve; clean and replace.
	Air cylinder failure	Remove air cylinder and reinstall air cylinder parts as necessary.
Significant material leaking from pump rear seal	Pump shaft worn	Remove pump shaft assembly, and reinstall rear pump rebuilt kit.

Problem	Cause	Solution
Material dispensed not correct weight	Specific gravity of one or more of the two materials has changed since calibration	Recalibrate machine.
	Machine air pressure has changed since calibration.	Readjust air pressure regulator to value used when machine was calibrated, or recalibrate machine.
	Not enough material in one or more tanks	Check tank levels; fill and prime as necessary.
	Mixer has slight obstruction	Replace static mixer. Prime machine.
	Check valve malfunction	Remove check valve; clean or replace as necessary.
	Piston worn or broken	Replace piston.
Machine dispensing off ratio	One tank is empty	Check tank levels. Add material if necessary.
	Tank ball valve closed	Open tank ball valve. Prime machine.
	Machine out of phase	Rephase machine.
	Check valve malfunction	Remove check valve; clean or replace as necessary.
	Piston worn or broken	Replace piston.
Pumps drawing material back from valve hose	Check valve stuck open	Remove check valve, clean or replace as necessary.

Error Codes (Advanced Display Module)

Code-Class-Event Shown on Errors Screen	Description	System Behavior Ref
050X-A-Improper System Cal	Improper Calibration	5
06CX-A-Invalid Key Token	No or Invalid Key Token	4
A401-A-Over Current Z1	Heater Over Current, Zone #1	7
A402-A-Over Current Z2	Heater Over Current, Zone #2	7
A403-A-Over Current Z3	Heater Over Current, Zone #3	7
A404-A-Over Current Z4	Heater Over Current, Zone #4	7
A4C1-A-Fan Over Current Z1	High Relay 2 Current, Zone #1	7
A4C2-A-Fan Over Current Z2	High Relay 2 Current, Zone #2	7
A4C3-A-Fan Over Current Z3	High Relay 2 Current, Zone #3	7
A4C4-A-Fan Over Current Z4	High Relay 2 Current, Zone #4	7
A701-A-Heater Fault Z1	Unexpected Heater Current, Zone #1	7
A702-A-Heater Fault Z2	Unexpected Heater Current, Zone #2	7
A703-A-Heater Fault Z3	Unexpected Heater Current, Zone #3	7
A704-A-Heater Fault Z4	Unexpected Heater Current, Zone #4	7
A7C1-A-Fan Output Fault Z1	Unexpected Relay 2 Current, Zone #1	7
A7C2-A-Fan Output Fault Z2	Unexpected Relay 2 Current, Zone #2	7
A7C3-A-Fan Output Fault Z3	Unexpected Relay 2 Current, Zone #3	7
A7C4-A-Fan Output Fault Z4	Unexpected Relay 2 Current, Zone #4	7
B10X-A-Small Shot Request	Less Than Minimum Shot Requested	5
CAC1-A-Comm. Error FCM 1	Communication Error, FCM3 #1	2
CAC1-A-Comm. Error FCM2	Communication Error, FCM3 #2	3
CAC1-A-Comm. Error Heat Z1	Communication Error, Heat Zone #1	1
CAC1-A-Comm. Error Heat Z2	Communication Error, Heat Zone #2	1
CAC1-A-Comm. Error Heat Z3	Communication Error, Heat Zone #3	1
CAC1-A-Comm. Error Heat Z4	Communication Error, Heat Zone #4	1
DEFX-A-Piston Timeout	Piston Stroke Timeout	5
DJ0X-D-Linear Sensor Fault	Bad Linear Position Sensor	6
F2A-Low Flow A Side	Low A Side Fluid Flow, relative to calibration and user-input allowable variance.	6

Code-Class-Event Shown on Errors Screen	Description	System Behavior Ref
F2B-Low Flow B Side	Low B Side Fluid Flow, relative to calibration and user-input allowable variance.	6
F2FX-D-Delta Velocity Minus	Delta Velocity Minus	6
F3FX-D-Delta Velocity Plus	Delta Velocity Plus	6
F6A-Flow Meter A Problem	Flow Meter A Problem, or bad connection between Fluid Control Module and Flow Meter A	6
F6B-Flow Meter B Problem	Flow Meter B Problem, or bad connection between Fluid Control Module and Flow Meter B	6
L2AX-D-Low Level Tank A	Low Material Level, Tank A	6
L2BX-D-Low Level Tank B	Low Material Level, Tank B	6
L2FX-D-Low Level Tank A/B	Low Material Level, Both Tanks	6
L8AX-D-Refill Timeout A	Auto Refill Failed, A Side	6
L8AX-D-Refill Timeout B	Auto Refill Failed, B Side	6
P2AX-D-Low Pressure A	A Side Low Pressure, relative to calibration and user-input allowable variance.	6
P2BX-D-Low Pressure B	B Side Low Pressure, relative to calibration and user-input allowable variance.	6
P3AX-D-High Pressure A	A Side High Pressure, relative to calibration and user-input allowable variance.	6
P3BX-D-High Pressure B	B Side High Pressure, relative to calibration and user-input allowable variance.	6
P6AX-D-Pressure Fault A	Problem with A Side Piston Pressure Transducer or Transducer Connection	6
P6BX-D-Pressure Fault B	Problem with B Side Piston Pressure Transducer or Transducer Connection	6
P6DX-D-Pressure Fault A/B	Problem with A and B Side Piston Pressure Transducer or Transducer Connection	6
P7DX-D-Out of Phase	Machine Out of Phase, relative to calibration and user-input allowable variance.	6
R2-A:B Ratio Low	A:B Ratio is low, relative to calibration and user-input allowable variance.	6
R3-A:B Ratio High	A:B Ratio is high, relative to calibration and user-input allowable variance.	6
T201-D-Low Material Temp Z1	Material Below Temperature, Zone #1	8
T202-D-Low Material Temp Z2	Material Below Temperature, Zone #2	8

Code-Class-Event Shown on Errors Screen	Description	System Behavior Ref
T203-D-Low Material Temp Z3	Material Below Temperature, Zone #3	8
T204-D-Low Material Temp Z4	Material Below Temperature, Zone #4	8
T401-A-High Material Temp Z1	Material Over Temperature, Zone #1	7
T402-A-High Material Temp Z2	Material Over Temperature, Zone #2	7
T403-A-High Material Temp Z3	Material Over Temperature, Zone #3	7
T404-A-High Material Temp Z4	Material Over Temperature, Zone #4	7
T4C1-A-Blanket Over Temp Z1	Blanket Over Temperature, Zone #1	7
T4C2-A-Blanket Over Temp Z2	Blanket Over Temperature, Zone #2	7
T4C3-A-Blanket Over Temp Z3	Blanket Over Temperature, Zone #3	7
T4C4-A-Blanket Over Temp Z4	Blanket Over Temperature, Zone #4	7
T601-A-Material RTD Fault Z1	Material RTD Fault, Zone #1	7
T602-A-Material RTD Fault Z2	Material RTD Fault, Zone #2	7
T603-A-Material RTD Fault Z3	Material RTD Fault, Zone #3	7
T604-A-Material RTD Fault Z4	Material RTD Fault, Zone #4	7
T6C1-A-Blanket RTD Fault Z1	Blanket RTD Fault, Zone #1	7
T6C2-A-Blanket RTD Fault Z2	Blanket RTD Fault, Zone #2	7
T6C3-A-Blanket RTD Fault Z3	Blanket RTD Fault, Zone #3	7
T6C4-A-Blanket RTD Fault Z4	Blanket RTD Fault, Zone #4	7
T801-A-No Heat Z1	No Temperature Rise, Zone #1	7
T802-A-No Heat Z2	No Temperature Rise, Zone #2	7
T803-A-No Heat Z3	No Temperature Rise, Zone #3	7
T804-A-No Heat Z4	No Temperature Rise, Zone #4	7
T901-A-Temp Switch Cutoff Z1	Over Temp Switch Open, Zone #1	7
T902-A-Temp Switch Cutoff Z2	Over Temp Switch Open, Zone #2	7
T903-A-Temp Switch Cutoff Z3	Over Temp Switch Open, Zone #3	7
T904-A-Temp Switch Cutoff Z4	Over Temp Switch Open, Zone #4	7
T9C1-A-Control Shutdown Z1	PCB Over Temperature, Zone #1	7
T9C2-A-Control Shutdown Z2	PCB Over Temperature, Zone #2	7
T9C3-A-Control Shutdown Z3	PCB Over Temperature, Zone #3	7
T9C4-A-Control Shutdown Z4	PCB Over Temperature, Zone #4	7
WM01-A-Current Fault Z1	High Relay 1 Current, Zone #1	7

Code-Class-Event Shown on Errors Screen	Description	System Behavior Ref
WM02-A-Current Fault Z2	High Relay 1 Current, Zone #2	7
WM03-A-Current Fault Z3	High Relay 1 Current, Zone #3	7
WM04-A-Current Fault Z4	High Relay 1 Current, Zone #4	7
WMC1-A-Control Fault Z1	Unexpected Relay 1 Current, Zone #1	7
WMC2-A-Control Fault Z2	Unexpected Relay 1 Current, Zone #2	7
WMC3-A-Control Fault Z3	Unexpected Relay 1 Current, Zone #3	7
WMC4-A-Control Fault Z4	Unexpected Relay 1 Current, Zone #4	7

System Behavior Descriptions

NOTE: System behavior descriptions apply only to Advanced Display Module errors.

System Behavior Reference	System Behavior Description
1	When this error is generated, a pop-up with the error-code will be shown until it is acknowledged by pressing the Enter button (↵). The heat control will be turned off, any auto-sequencing in progress will be stopped, and the foot switch will be disabled until the error-code is acknowledged. When the error condition is cleared, the heat control may be turned back on from the Home screen. This error will not disable purge or recirculation operation.
2	When this error is generated, a pop-up with the error-code will be shown until it is acknowledged by pressing the Enter button (↵). All physical machine operation will be disabled until the error condition is corrected. The display module can still be used but all machine commands sent will be ignored.
3	When this error is generated, a pop-up with the error-code will be shown until it is acknowledged by pressing the Enter button (↵). Any auto-sequencing in progress will be stopped and the foot switch will be disabled until the error-code is acknowledged. This error will not disable purge or recirculation operation. All features dependent on Fluid Control Module #2 will be disabled until the error condition is corrected.
4	When this error is generated, a pop-up with the error-code will be shown continuously until the error condition is corrected. The machine and display module are completely disabled until the error condition is corrected.
5	When this error is generated, a pop-up with the error-code will be shown. Any auto-sequencing, purge timer or recirculation timer operation in progress will be stopped and the foot switch will be disabled until the error-condition is cleared. The error-code pop-up will be shown until the error condition is cleared. When the error condition is cleared, all options may be turned back on.

System Behavior Reference	System Behavior Description
6	When this error is generated, a pop-up with the error-code will be shown until it is acknowledged by pressing the Enter button (↵). Any auto-sequencing in progress will be stopped, and the foot switch will be disabled until the error-code is acknowledged. Once the error-code pop-up is acknowledged, the machine will return to normal operation The error will be shown in the Errors screen until the condition is cleared. The error-code pop-up will not reappear unless the error condition is cleared and then reappears. This error will not disable purge or recirculation operation.
7	When this error is generated, a pop-up with the error-code will be shown until it is acknowledged by pressing the Enter button (↵). All heat options will be turned off, any auto-sequencing in progress will be stopped, and the foot switch will be disabled until the error-code is acknowledged. When the error condition is cleared, the heat control may be turned back on from the Home screen. This error will not disable purge or recirculation operation.
8	When this error is generated, a pop-up with the error-code will be shown until it is acknowledged by pressing the Enter button (↵). All heat options will remain on, any auto-sequencing in progress will be stopped, and the foot switch will be disabled until the error-code is acknowledged. This error will not disable purge or recirculation operation.

Error Codes (Standard Display Module)

When the machine is operating and a fault is detected, it will report the condition by generating an error code. Error codes are typically generated when the machine is idle after dispensing a shot.

When error codes are generated, a screen will be displayed which contains an animation sequence, the error code number and an ICON symbol representing the condition detected. The HMI will also output an error code tone sequence. The tone sequence cannot be disabled.

When errors are generated, the machine will automatically be disabled and remain in an idle state until the user acknowledges the condition. Any active purge timer present prior to error code generation will be suspended, and will need re-started by requesting a shot after the error is acknowledged.

The following typical screen is generated when an error code is generated:

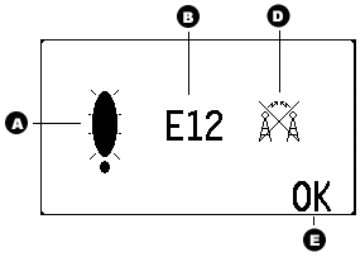

FIG. 1: Typical Error Code Screen

Key:
A Error Code Animation Field
B Error Code Number Field
D Error Code ICON
E Error Code Acknowledgement ICON

When an error code is generated, the user will need to acknowledge the condition by pressing the soft key under the OK ICON.

After the user activates the OK key, the error number shown in FIG. 1, will be displayed on the bottom left hand corner of the Run screen, while the condition is still present.

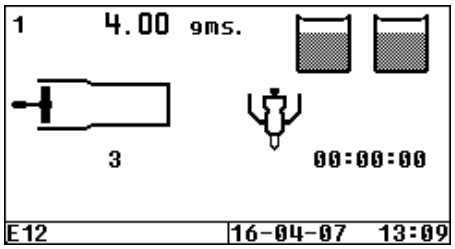

FIG. 2: Typical Run Screen with Active Error Code

The example E12 number on the main run screen will remain on the run screen as long as the error condition exists. If the problem is corrected the example E12 number will be removed.

If more than 1 error code condition exists for the machine, the corresponding “EXX” numbers will be listed on the bottom left corner, separated by commas.

Error Code	Title	Cause, Details	ICON
E11	Stuck Key Error	A key on membrane has been active (pressed) for > 30 seconds continuously. Replace the HMI. This error code does not require user acknowledgment and will clear itself automatically if the condition is removed.	
E12	Communication Error	The Display module has lost communication with the Fluid Control Module. Material dispensing will be disabled if this condition exists. Check communication cables between the 2 electronic components, or check the HMI and/or the Fluid Control Module. This error will be regenerated continuously while the condition exists.	
E13	No or Invalid Run Token Error	The Run Token in the FCM is missing (not installed), or does not have the correct data.	
E21	Piston Stroke Time-out Error	A piston stroke action has taken > 55 seconds. Typically caused by no/too little air pressure to the machine or a mechanical interference with the piston has occurred. Check machine input line pressure.	

Error Code	Title	Cause, Details	ICON
E23	Less than Minimum Shot Requested Error	User has requested a shot < the minimum allowable size entered during calibration. (< 15% of stoke, N/A in Operator Mode).	
E24	Improper Calibration Error	The calibration done on the machine is invalid, so the requested shot cannot be executed. For instance, a Large Stroke Calibration Shot mass which is less than the Short Stroke Calibration Shot mass (C4 screen) will create this error code. If the wiring to the linear position transducer is reversed this error will appear. If invalid piston positions are calibrated into the machine (C1 screen) this error will appear.	
E25	Delta Velocity (“V”) Minus Error	The piston velocity is slower than the calibration velocity measured, by the percentage amount selected by the user (20%, 40% or 60%). If the user selects 0%, this monitoring or alarm feature is disabled. If generated, shot size accuracy may be degraded. Typically the problem is created when the machine pressure regulator is adjusted to different value from when the machine was calibrated. Another less likely cause could be a mechanical failure with dispensing (worn piston, etc.). This error will not be generated for a purge shot or when the machine is in Operator mode.	ΔV-
E26	Delta Velocity (“V”) Plus Error	The piston velocity is faster than the calibration velocity measured, by the percentage amount selected by the user (20%, 40% or 60%). If the user selects 0%, this monitoring or alarm feature is disabled. If generated, shot size accuracy may be degraded. Typically the problem is created when the machine pressure regulator is adjusted to different value from when the machine was calibrated. Another less likely cause could be a mechanical failure with dispensing (worn piston, etc.). This error will not be generated for a purge shot, or when the machine is in Operator mode.	ΔV+
E27	Low Material Level, Tank A Alarm or Error	Tank A is low (only generated if tank sensing is enabled). Fill tank A with material. Tank level errors will be generated after every shot if the condition still exists.	
E28	Low Material Level, Tank B Alarm or Error	Tank B is low (only generated if tank sensing is enabled). Fill tank B with material. Tank level errors will be generated after every shot if the condition still exists.	
E29	Low Material Level, Both Tanks Alarm or Error	Both tanks are low (only generated if tank sensing is enabled). Fill both tanks with material. Tank level errors will be generated after every shot if the condition still exists.	
E50	Bad Linear Position Sensor	There is a fault with the linear position sensor. Check wiring or replace.	

Electrical Schematics

NOTE: *Fluid Control Module #2 sections apply only to models with Advanced Display module*

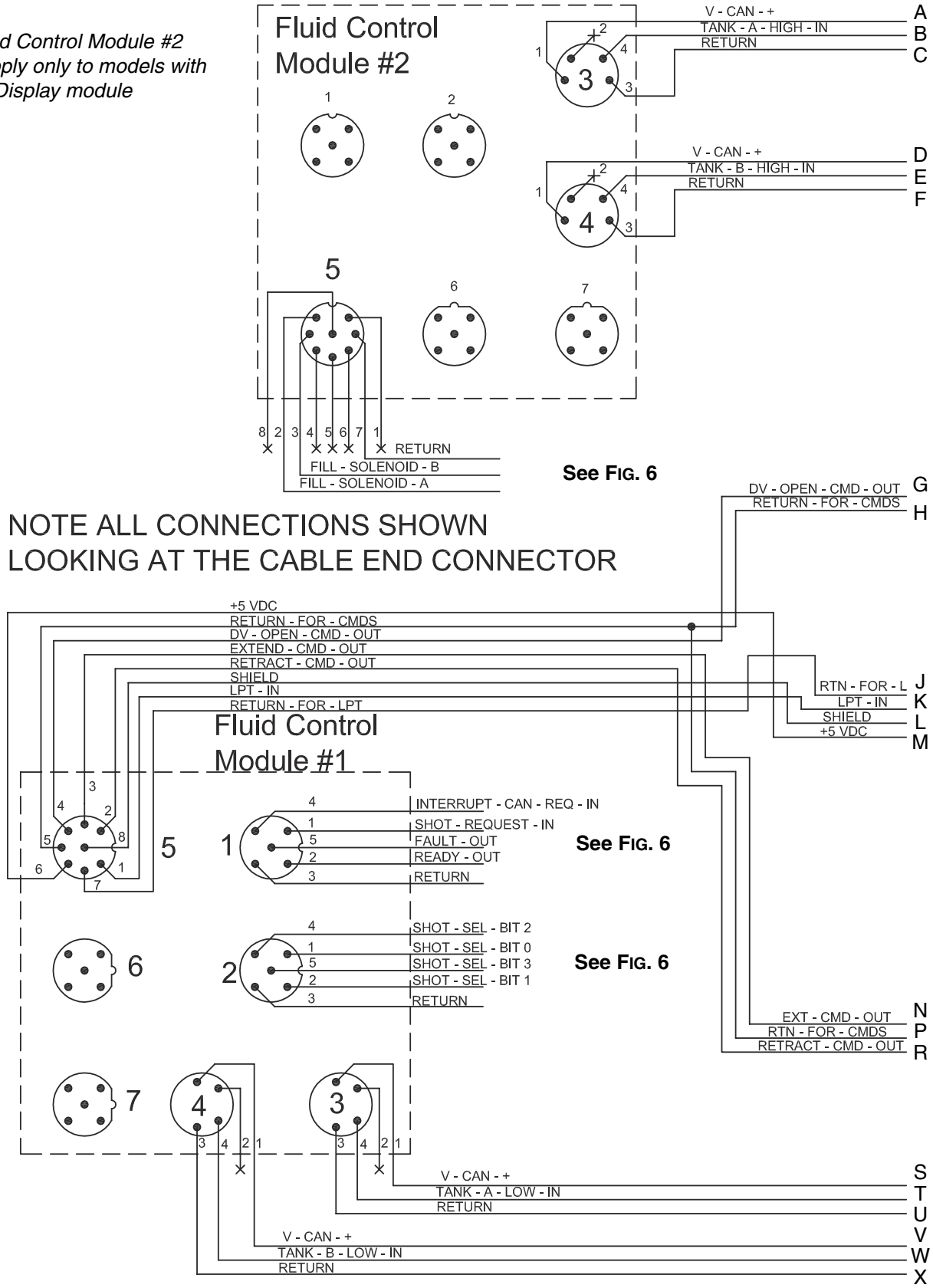

FIG. 3: Electrical Schematic - Page 1

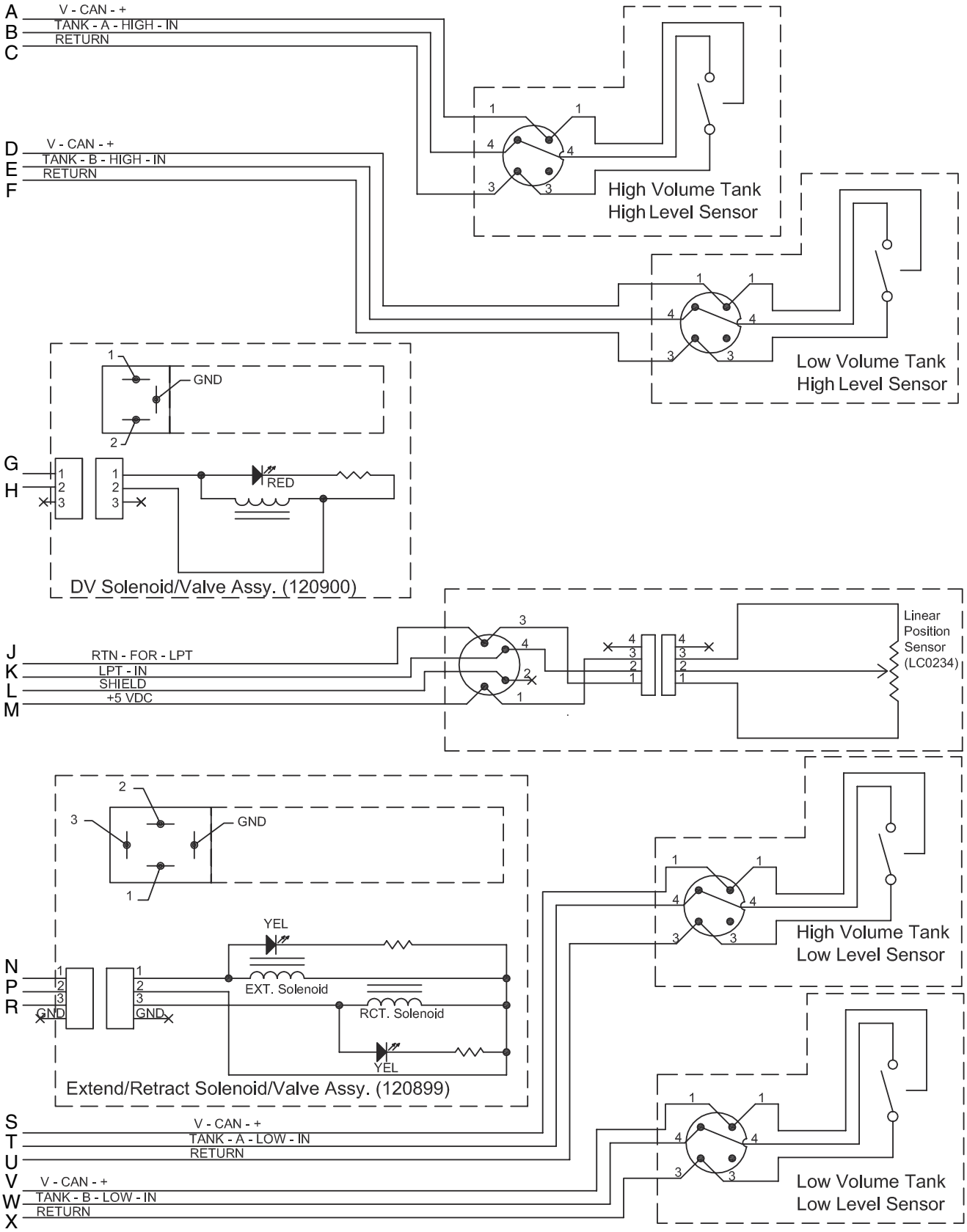

FIG. 4: Electrical Schematic - Page 2

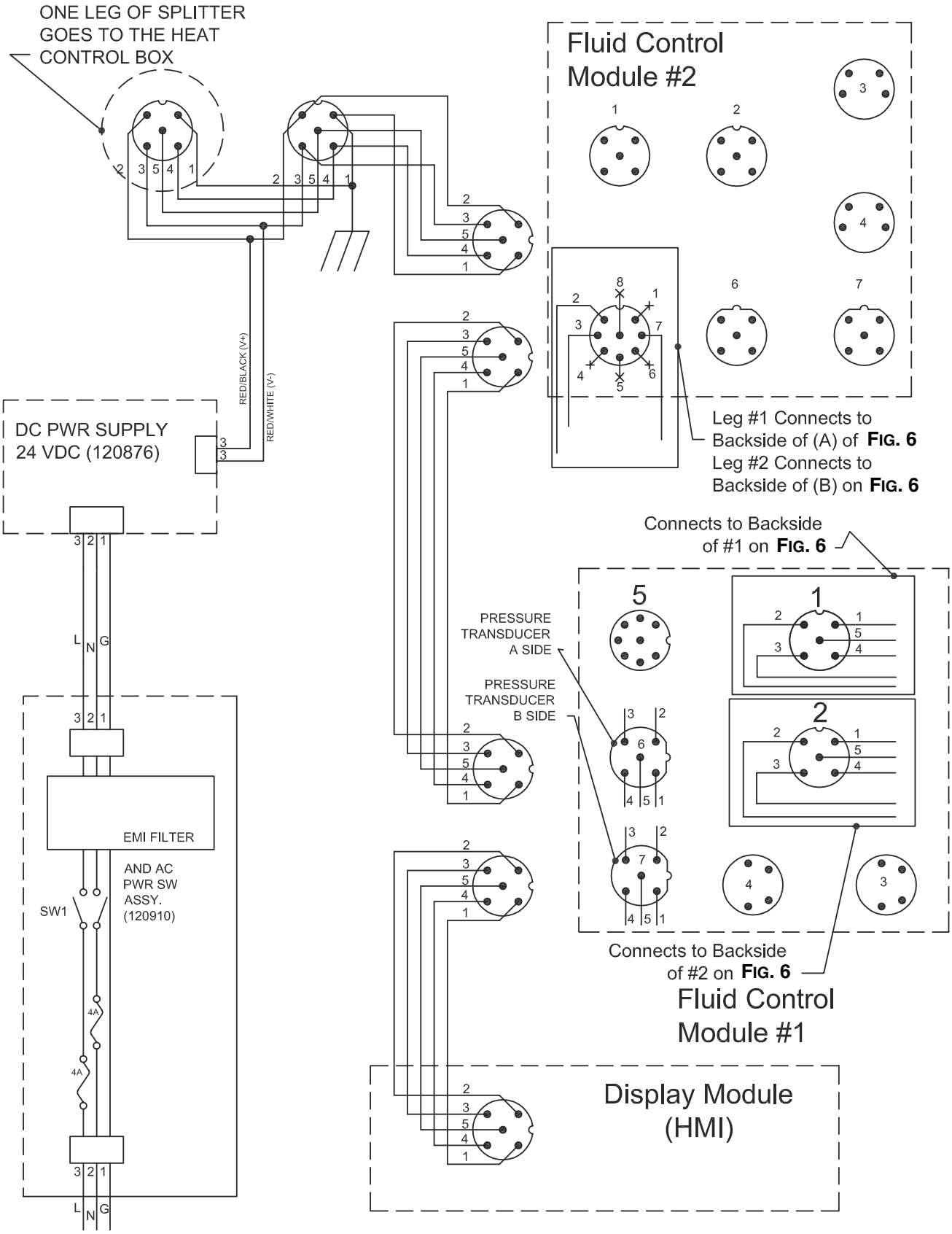

FIG. 5: Electrical Schematic - Page 3

NOTE: See PR70 operation manual for Optional External Control Interface instructions.

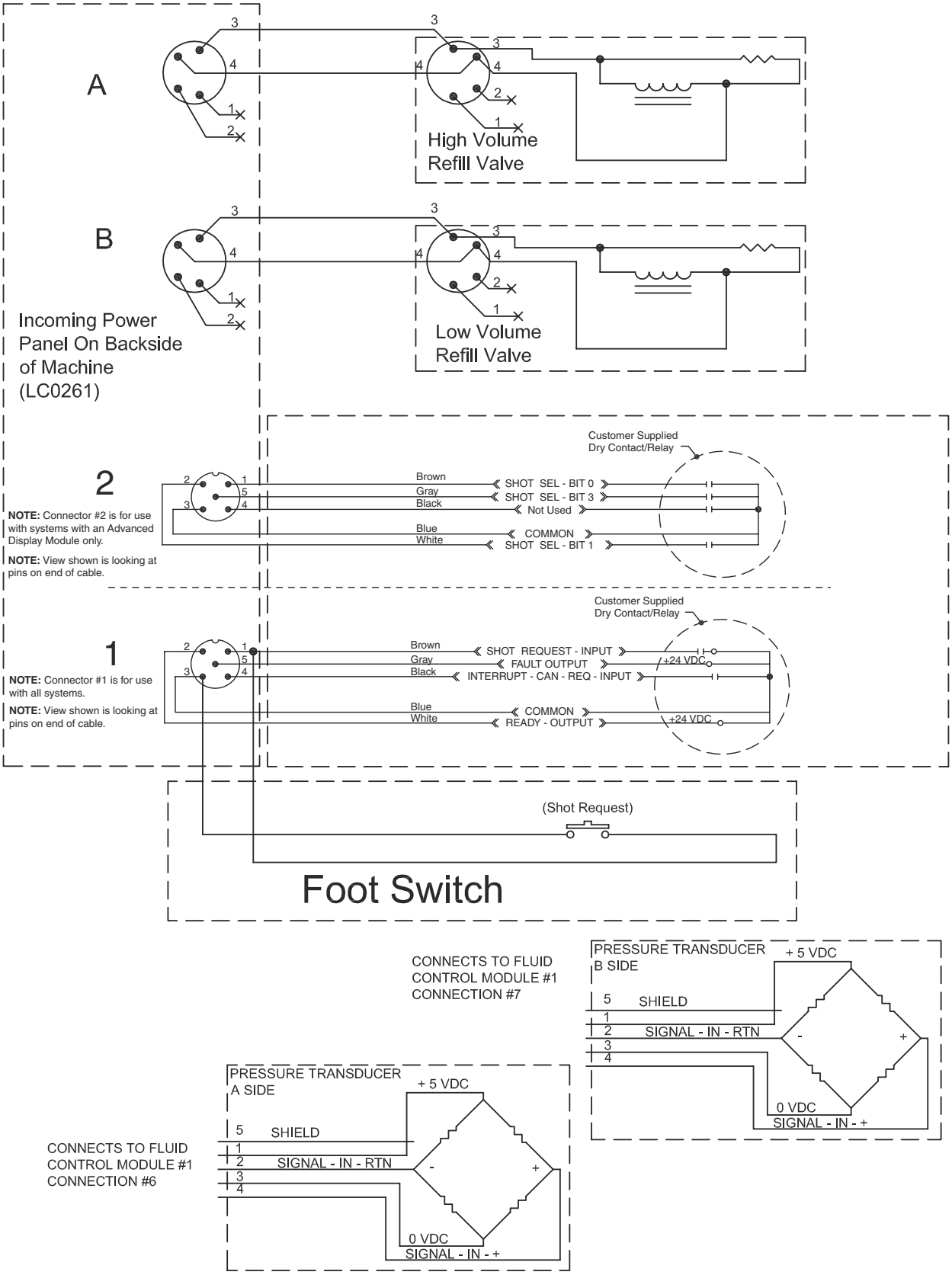

FIG. 6: Electrical Schematic - Page 4

Repair

HydraCheck Kit Installation

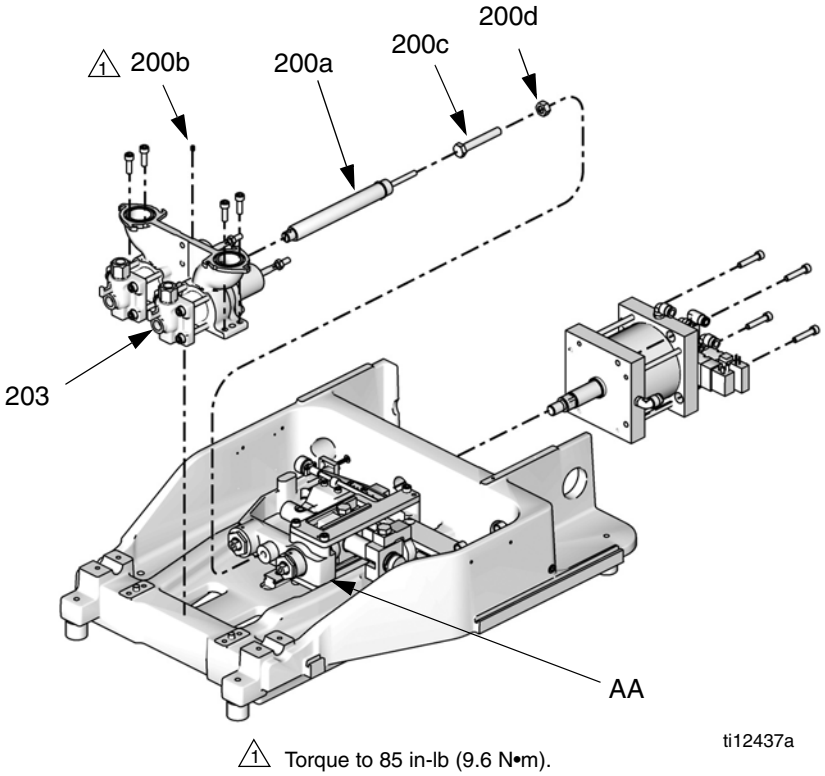

FIG. 7: HydraCheck Installation - Variable Ratio Base

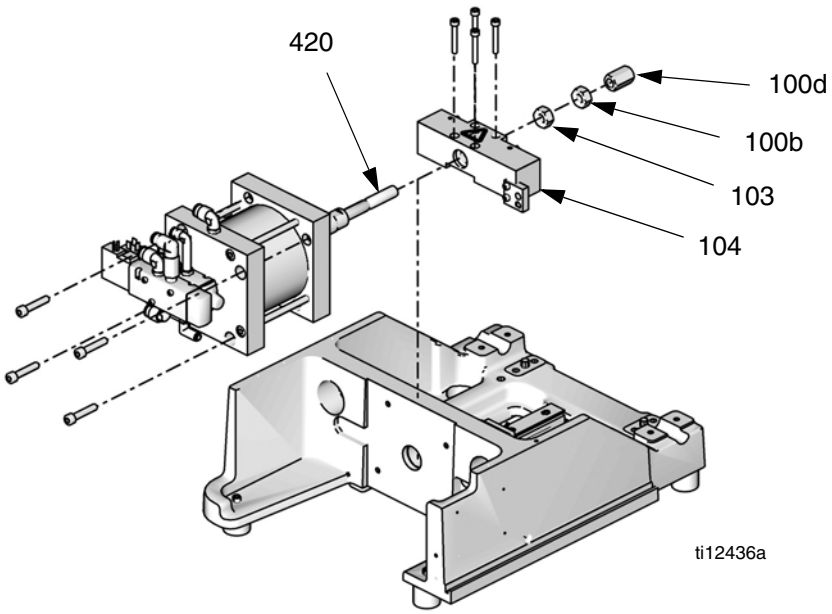

FIG. 8: HydraCheck Installation - Fixed Ratio Base

The following procedure is the same for Fixed and Variable Ratio bases, except where noted. See FIG. 7 and FIG. 8 for part references. See **Kits** on page 80 for kit numbers.

NOTE: The HydraCheck kit is intended to be used with low viscosity materials to minimize splashing. It is not intended to be used as a timer or flow control device.

Prepare Machine for Kit Installation

1. Navigate to the Manual screen.
2. Press the Retract Piston Command button.
3. Relieve system pressure. See **Pressure Relief Procedure** on page 14.
4. Remove shroud screws (2202, 2409). See FIG. 17 on page 44 and FIG. 21 on page 49.
5. Remove the shroud (117, 214). See FIG. 16 on page 42 and FIG. 21 on page 49.

Install HydraCheck Shock

Be sure that system pressure is relieved and disabled before proceeding.

6. Install shock absorber (200a) through the opening in the pump sub-assembly (203) with the groove for the snap ring on the back of the pump assembly. The shock absorber can be inserted through the front or the back of the pump sub-assembly.
7. Install shock snap ring (included with shock, not shown) onto the shock absorber (200a) in the groove farthest from the pump sub-assembly.
8. Install set screw (200b) and torque to 85 in-lb (9.6 N•m).

Install Adjustment Screw/Cap

9. **On Variable Ratio models,** loosely install hex nut (200d) and adjustment screw (200c) onto the variable ratio drive block (AA).
   On Fixed Ratio models, loosely install hex nut (100b) and adjustment cap (100d) onto the air cylinder shaft (420).

Adjust the Adjustment Screw/Cap

10. Push the drive block (104, AA) forward until resistance is felt when it engages the cylinder. Make sure the resistance is not due to shock absorber (200a) contact with the adjustment screw (200c) or adjustment cap (100d).
11. Adjust the adjustment screw or adjustment cap until it contacts the shock absorber.
12. **On Variable Ratio models,** hold the adjustment screw (200c) in place and tighten the hex nut (200d) against the drive block (AA).
    On Fixed Ratio models, hold the adjustment cap (100d) in place and tighten the hex nut (100b) against the adjustment cap.

Prepare Machine for Operation

13. Lift the system air pressure relief switch to enable system pressure. It is the yellow tab at the left, rear of the machine.

Adjust Shock Resistance

14. Execute a shot to see how the shock absorber affects the speed of the drive block (104, AA).
15. The shock absorber has a numeric scale on one side. Rotate the knob with the scale to a higher value for more resistance. Rotate the knob to a lower value for less resistance.
16. Repeat these steps until the desired resistance is achieved.

Air Cylinder Kit Installation

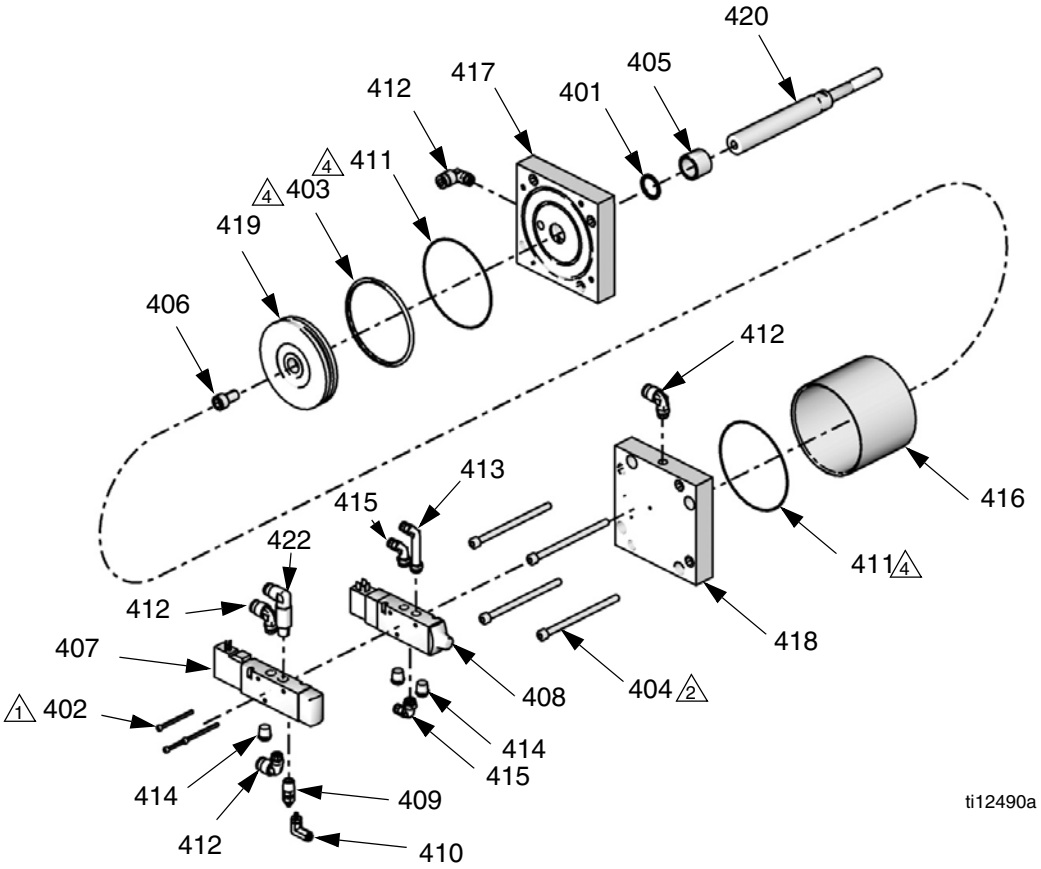

1 Torque to 41 in-lb (4.6 N•m).

2 Torque to 350 in-lb (39.5 N•m).

3 Torque to 100 ft-lb (135 N•m).

4 Coat all sliding surfaces with lubricant, part 115982.

5 Apply sealant tape to npt fittings.

See **Kits** on page 80 for kit numbers.

Prepare Machine for Kit Installation

1. Relieve pressure. See **Pressure Relief Procedure**, page 14.
2. Shut down the machine. See **Shutdown**, page 14.
3. Disconnect the pressurized air input hose.
4. Remove shroud screws (2202, 2409). See FIG. 17 on page 44 and FIG. 21 on page 49.
5. Remove the shroud (117, 214). See FIG. 16 on page 42 and FIG. 21 on page 49.

Disassemble the Air Cylinder

6. Remove the incoming power bracket (110) from the machine by removing the two attachment screws (109). See FIG. 15 on page 41.
7. Remove the two solenoid valves (407, 408) from the cylinder blind end block (418) by removing the three socket head cap screws (402).
8. Use an open-end wrench to remove all hex nuts (103, 100b, 100d) connecting the piston rod to the drive block. See FIG. 15 on page 41.
9. Remove the four screws (108) that attach the cylinder rod end block (417) to the frame. See FIG. 15 on page 41. Access the screws through the four holes

in the blind end block (418) using a long allen wrench.

10. Partially remove the air cylinder by pulling on the cylinder from the back of the machine until the air lines at the elbow fittings can be seen.

11. With the cylinder partially removed, disconnect the airlines at the air cylinder elbow fittings.

12. Finish removing air cylinder.

13. On a bench, disassemble the air cylinder by removing the four long screws (404) that connect the two cylinder blocks.

Clean and Inspect the Parts

14. Inspect the cylinder tube (416) and piston (419) for scratches. Replace if necessary.

15. Using a clean dry cloth, remove any grease from the inside of the tube (416), the outside of the piston (419), and the cylinder rod (420).

16. Remove the two cylinder block o-rings (411) from the blocks (417, 418) and replace.

17. Remove the piston o-ring (403) and replace.

18. Remove the cylinder rod (420) from the rod end block (417).

19. Remove the rod o-ring (401) from the rod end block (417) and replace.

20. Liberally apply high temperature lubricant grease (part 115982) to the inside of the tube (416), the outside of the piston (419), all the o-rings, and the cylinder rod (420).

Re-Assemble the Air Cylinder

NOTICE
In the following step, the long screws must be tightened in a crisscross pattern. Failure to do so may result in air cylinder damage.

21. Reinstall the four long screws (404) that attach the two drive blocks (417, 418) by finger-tightening them. Then torque the bolts to 350 in-lb (39.5 N•m) in a crisscross pattern.

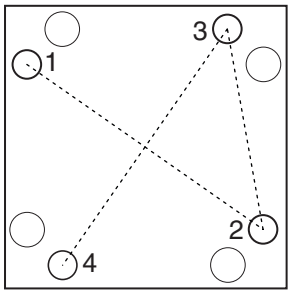

22. Insert the cylinder rod (420) through the hole in the rod end cylinder block (417) and base frame.

23. Before the cylinder is completely in place, reconnect the airlines to the cylinder block elbows fittings. Verify the correct airlines are connected.

24. Reinstall the four screws (108) that attach the cylinder rod end block (417) to the frame. See FIG. 15 on page 41.

25. Reinstall the hex nuts (103, 100b, 100d) to the cylinder rod (420) and torque to 100 ft-lb (135 N•m). See FIG. 15 on page 41.

26. Install the three screws (402) that attach the solenoid valves (407, 408) to the blind end block (418). Torque to 41 in-lb (4.6 N•m).

Prepare Machine for Operation

27. Reattach the incoming power bracket (110) by reinstalling the two attachment screws (109). See FIG. 15 on page 41.

28. Reconnect pressurized air input hose.

29. Operate the machine and ensure there are no air leaks are found.

30. Install the shroud (117, 214). See FIG. 20 on page 47 and FIG. 21 on page 49.

31. Install shroud screws (2202, 2409). See FIG. 17 on page 44 and FIG. 21 on page 49.

32. Calibrate the machine. See the appropriate operation manual referenced at the beginning of this manual for procedure.

Rear Pump Rebuild Kit Installation

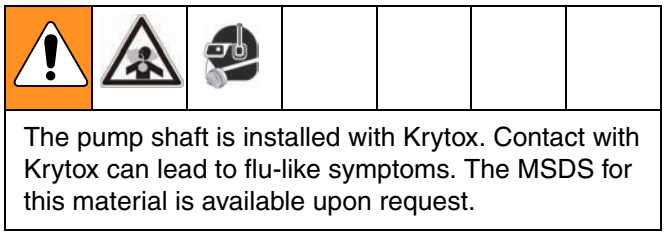

The pump shaft is installed with Krytox. Contact with Krytox can lead to flu-like symptoms. The MSDS for this material is available upon request.

See **Kits** on page 80 for kit numbers.

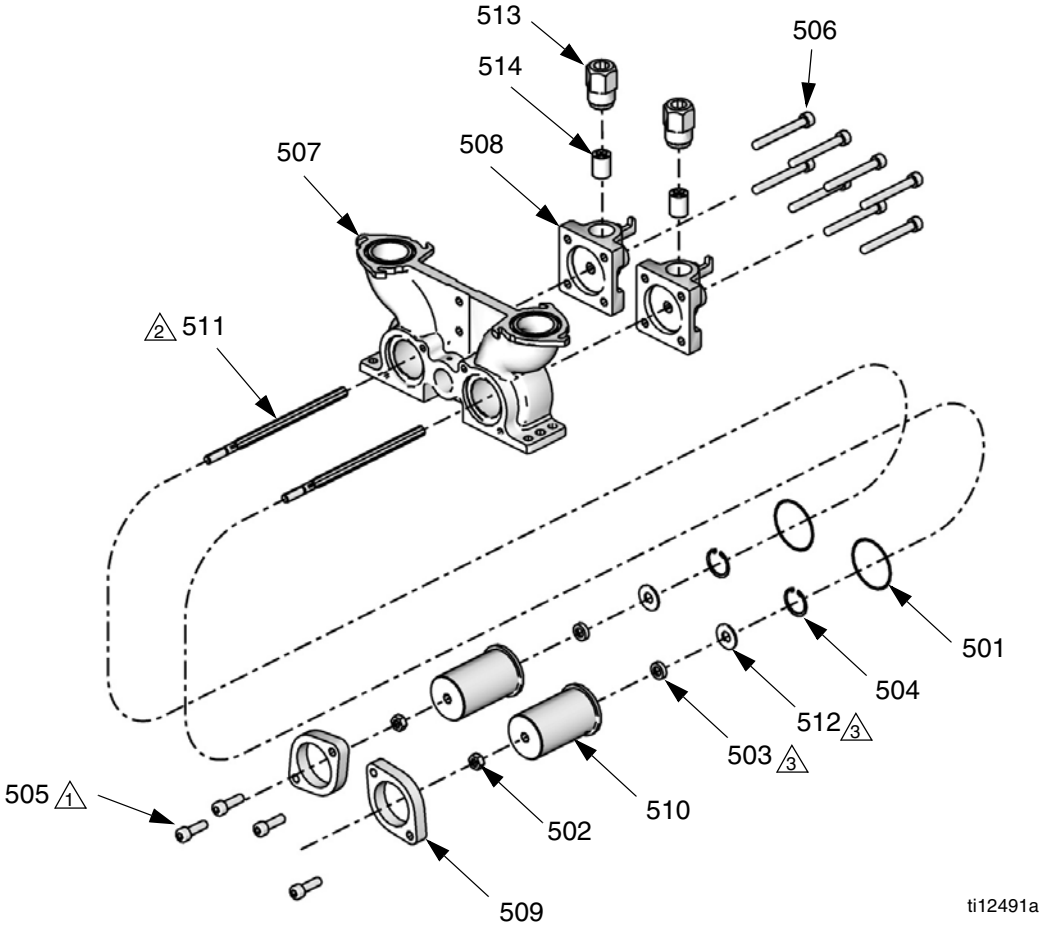

1 Torque to 350 in-lb (39.5 N•m).

2 Lube shaft with krytox grease prior to insertion into bearing.

3 Shaft seal (503) must be installed with open side facing the washer (512).

FIG. 9

Prepare Machine for Kit Installation

1. Drain the pump.
   - **If ball valves are installed,** close the ball valves then take several shots.
   - **If ball valves are not installed,** empty the tanks. Perform shots repeatedly until no material comes out of the dispense valve.
2. Relieve pressure. See **Pressure Relief Procedure**, page 14.
3. Shut down the machine. See **Shutdown**, page 14.
4. Disconnect the pressurized air input hose.
5. Remove shroud screws (2202, 2409). See FIG. 17 on page 44 and FIG. 21 on page 49.

6. Remove the shroud (117, 214). See FIG. 16 on page 42 and FIG. 21 on page 49.

Disassemble the Rear Pump Assembly

7. Disconnect the pump shaft (511) from the drive block.
   a. Loosen the shaft locking nut (502).
   b. Hold the drive block alignment rod (2302, 2419) stationary with a wrench. See FIG. 18 on page 45 and FIG. 22 on page 50.
   c. Turn the pump shaft (511) with a wrench.
   d. Manually push the pump shaft (511) forward to to separate the shaft from the drive block.
8. Remove the shaft lock nut (502).
9. Remove the two screws (505) that hold the pump collar in place.
10. Remove the pump collar (509) from the pump housing (507).
11. Slide the pump bearing housing (510) away from the pump housing (507) to remove.
12. Remove rear pump components from the pump bearing housing (510).

Clean and Inspect the Parts

13. Using a clean dry cloth, remove any existing grease from the bearing housing.
14. Apply new high temperature grease lubricant (part 115982) to the inside of the pump bearing housing (510), and the new rebuild components.

Assemble the Rear Pump Assembly

15. Install the new rebuild kit components into the bearing housing.

NOTICE

Be careful when installing the seal (503). Ensure there is masking tape on the threads of the piston rod and that the open side of the seal faces the piston rod when it slides onto the rod.

16. Apply one layer of thin masking tape over the male threads of the pump shaft that mates with the drive block. This will prevent the threads from damaging the seal (503).
17. Slide the pump shaft through the hole in the bearing housing.
18. Align the bearing housing in position next to the pump housing.
19. Install the pump collar over the bearing housing.
20. Attach the pump housing using the two screws (505) and torque to 350 in-lb (39.5 N•m).
21. Remove the masking tape from pump shaft (511).
22. Install the pump shaft lock nut (502) onto the pump shaft (511).
23. Connect the pump shaft to the drive block alignment rod (2302, 2419). See FIG. 18 on page 45 and FIG. 22 on page 50. Screw the shaft completely into the drive block.
24. Tighten the lock nut (502)

Prepare for Operation

25. Open the tank ball valves if installed.
26. Fill tanks.
27. Perform several shots to fill the pump with new material.
28. Calibrate and phase the machine. See the appropriate operation manual referenced at the beginning of this manual for procedure.

Piston/Cylinder Replacement Kit Installation

See **Piston Package** on page 60 and **Nylon and UHMW Piston Replacement Kits** on page 63 for kit numbers.

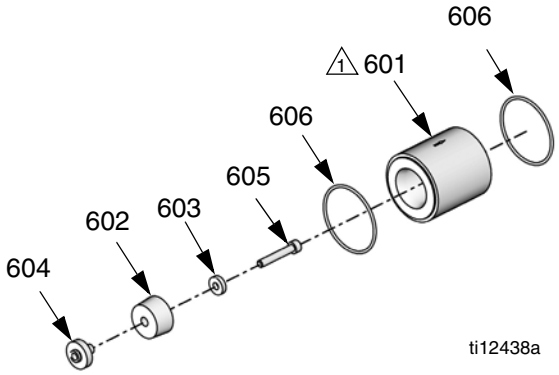

1 The arrow imprinted on the cylinder points toward the pump outlet.

Prepare Machine for Kit Installation

1. Drain the pump.
   - **If ball valves are installed,** close the ball valves then take several shots.
   - **If ball valves are not installed,** empty the tanks. Perform shots repeatedly until no material comes out of the dispense valve.
2. Relieve pressure. See **Pressure Relief Procedure**, page 14.
3. **Models with ADM:** To prevent machine movement, press the Machine Disable Mode key ( ). **Models with SDM:** To prevent machine movement, press the Red button .

Disassemble Cylinder

4. Remove the four end cap screws (506). See FIG. 9 on page 33.
5. Remove the pump end caps (508). See FIG. 9 on page 33. Allow the cap to hang by the hose.
6. Remove the cylinder (601) and o-rings (606) from the pump housing (507). See FIG. 9 on page 33.
7. Push the drive block (104, AA) forward until pistons are fully extended. See FIG. 7 and FIG. 8 on page 29.
8. Use a wrench to prevent the pump shaft (511) from rotating and remove the piston screw (605). See FIG. 9 on page 33.
9. Remove the piston (602) and any front or rear washers (603) from the pump shaft (511). See FIG. 9 on page 33.
10. Clean the washers.

Install Cylinder

11. Install the new piston and any front or rear washers.
12. Install the piston screw (605).

Tighten the piston screw until the piston stops rotating, then turn the screw an additional 1/4 turn.

13. Fully retract the piston.
14. Lubricate the new o-rings with high temperature grease (part 115982).
15. Insert the lubricated o-rings (606) into the grooves of the pump housing (507) and end caps (508). See FIG. 9 on page 33.
16. Install the cylinder between the pump housing (507) and end cap (508). See FIG. 9 on page 33.
17. Secure cylinder in place with the four end cap screws (506). See FIG. 9 on page 33.

Prepare Machine for Operation

18. Open the tank ball valves if installed.
19. Fill tanks.
20. Perform several shots to fill the pump housing (507) with new material.
21. Calibrate and phase the machine. See the operation manual referenced at the beginning of this manual for procedure.

Check Valve Rebuild Kit Installation

See **Pump Sub-Assembly, LC0112**, page 54 for pump sub-assembly part references. See **Kits** on page 80 for kit numbers.

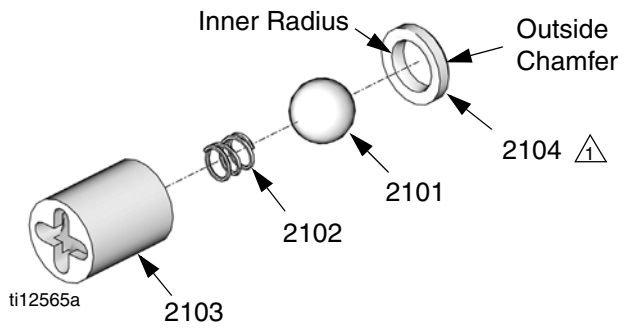

⚠1 Side of seat with outside chamfer must face away from ball. Side of seat with inner radius must face the ball.

FIG. 10: Check Valve Rebuild Kit

Prepare Machine for Kit Installation

1. Relieve pressure. See **Pressure Relief Procedure**, page 14.
2. **Models with ADM:** To prevent machine movement, press the Machine Disable Mode key ( ). **Models with SDM:** To prevent machine movement, press the Red button .
3. Place a waste container below the dispense valve to catch any dispensed material.
4. Push the drive block (104, AA) forward until pistons are fully extended. See FIG. 7 and FIG. 8 on page 29.
5. Move the waste container to below the check valve (514).
6. Disconnect the male hose fitting from the check valve housing (513) by loosening the hose from the housing. See **Pump Sub-Assembly, LC0112**, page 54.
7. Remove the check valve housing (513) from the pump endcap (508) by loosening the housing with a wrench.
8. Remove the existing check valve (514) from the housing by inserting a screwdriver or dowel rod into the female threaded end of the check valve housing (513).
9. Place the new check valve ball guide (2103) on a bench with the open end up. Install the check valve spring (2102) into the guide.
10. Install the check valve ball (2101) on top of the spring (2101).
11. Place the seat (2104) on top of the check valve ball (2101) with the outside chamfered side of the seat facing away from the check valve ball.
12. Hold both ends of the assembled check valve assembly and install the check valve into the unthreaded end of the check valve housing (513) with the ball end facing out. See FIG. 9 on page 33.
13. Apply pressure to the valve to snugly fit the assembled check valve (514) into the check valve housing (513). Fit the check valve seat (2104) into the valve guide. See FIG. 9 on page 33.

Verify when the assembled check valve (514) and housing (513) are turned up-side down that the contents of the check valve stay in place.

14. Use a wrench to insert the new valve and valve housing into the pump end cap (508).
15. Install the material male hose fitting into the check valve housing using a wrench.
16. Before operating the machine, activate a few shots to purge any air present in the material hose lines.
17. Calibrate the machine if necessary. See the appropriate operation manual referenced at the beginning of this manual for procedure.

Piston Plug Installation

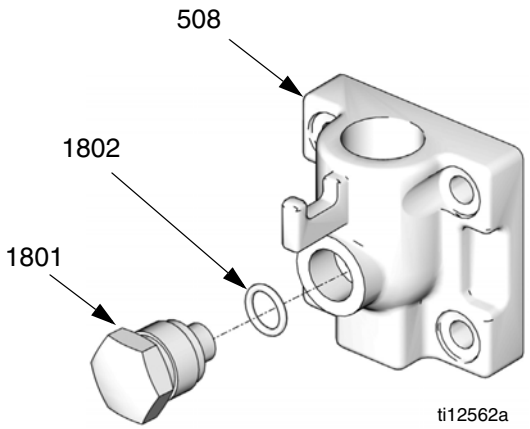

1. Drain the pump.
   - **If ball valves are installed,** close the ball valves then take several shots.
   - **If ball valves are not installed,** empty the tanks. Perform shots repeatedly until no material comes out of the dispense valve.
2. Relieve pressure. See **Pressure Relief Procedure**, page 14.
3. **Models with ADM:** To prevent machine movement, press the Machine Disable Mode key ( ). **Models with SDM:** To prevent machine movement, press the Red button .
4. Use a wrench to remove the existing piston plug (1801) from the pump end cap (508).
5. Remove the existing o-ring (1802).
6. Lubricate the new o-ring with a high temperature grease (part 115982) and install the lubricated o-ring into the end cap.
7. Install pump plug (1801) into end cap.
8. Open the tank ball valves if installed.
9. Fill tanks.
10. Perform several shots to fill the pump with new material.

Pressure Transducer Installation

NOTE: The pressure transducers are designed to work with the hoses available in the PR70 configurator. If they are used with other hoses, unexpected alarms may occur.

1. Follow steps 1 through 6 of **Piston Plug Installation** on this page.
2. Remove shield locking screws (2202, 2409) then remove shield (117, 214).
3. Install hex end of pressure transducer into end cap (508).
4. **For A side pressure transducers,** install data cable end of pressure transducer into port #6 of Fluid Control Module #1. See FIG. 5, page 27. **For B side pressure transducers,** install data cable end of pressure transducer into port #7 of Fluid Control Module #1. See FIG. 5, page 27.
5. Install shield and shield locking screws.
6. Follow steps 8 through 10 of **Piston Plug Installation** on this page.

Flow Meter Installation

1. Drain the pump.
   - **If ball valves are installed,** close the ball valves then take several shots.
   - **If ball valves are not installed,** empty the tanks. Perform shots repeatedly until no material comes out of the dispense valve.

2. Relieve pressure. See **Pressure Relief Procedure**, page 14.

3. **Models with ADM:** To prevent machine movement, press the Machine Disable Mode key ( ). **Models with SDM:** To prevent machine movement, press the Red button .

4. Remove shield locking screws (2202, 2409) then remove shield (117, 214).

5. Use a wrench to remove fluid lines from top of pump end cap (508).

6. Use fittings (2004, 2005) to install flow meter body (2001) onto end cap (508). See following image.

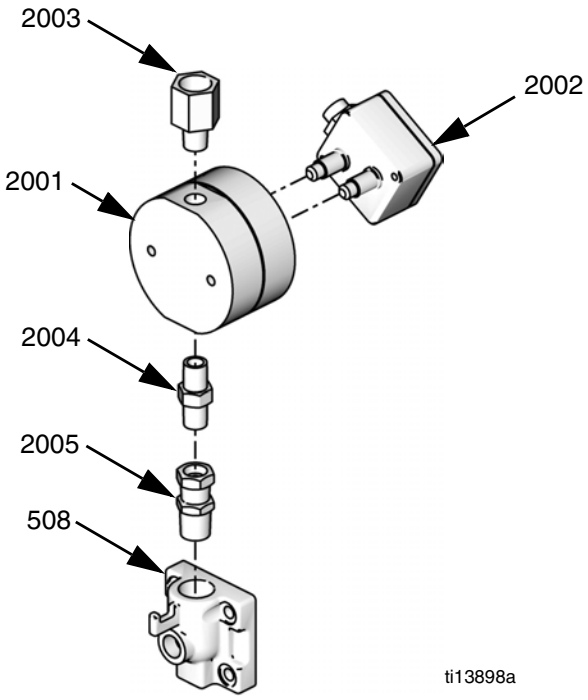

7. Install remaining fitting (2003) onto top of flow meter. See preceding image.

8. Install flow meter sensor (2002) onto flow meter body (2001).

9. Install fluid lines into fitting (2003) on top of flow meter.

10. **For side A flow meters,** plug flow meter sensor cable into port #1 on Fluid Control Module #2. **For side B flow meters,** plug flow meter sensor cable into port #2 on Fluid Control Module #2.

11. Open the tank ball valves if installed.

12. Install shield and shield locking screws.

13. Fill tanks.

14. Perform several shots to fill the pump with new material and to prime the flow meters.

Fluid Control Module Replacement

1. Remove access cover (D).

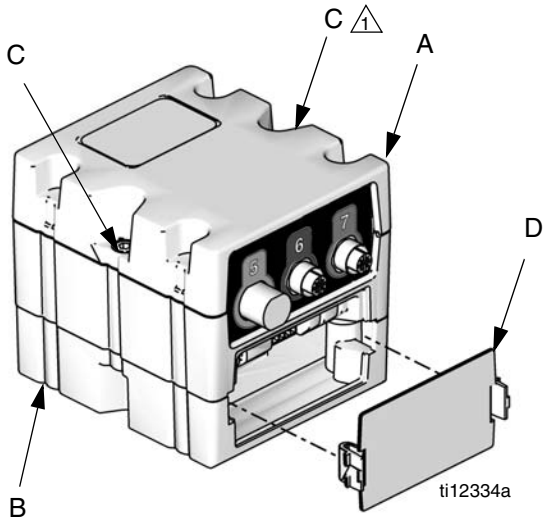

⚠1 Not visible from current angle.

FIG. 11

2. Remove two screws (C) and FCM (A) from base (B).
3. Mount base (B) to system with four screws. Insert screws through top of base and tighten to system.
4. Mount FCM (A) on base (B) with two screws (C).
5. Connect cables to front of fluid control module. See FIG. 12 and the following table.

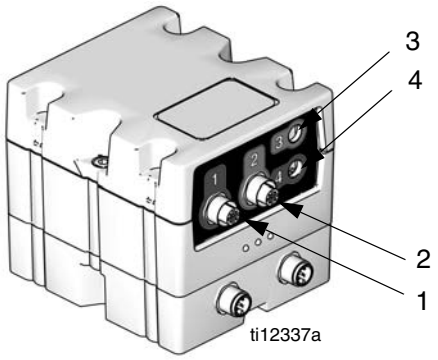

FIG. 12: Fluid Control Module Front Connections

If there is only one fluid control module on the machine, the module number is 1.
If there are two fluid control modules, the module closest to the air regulator is module number 1 and the other module is number 2.

Connection Reference (FIG. 12)	Module Number	Connects To
1	1	Footswitch or PLC Interface
2	1	Footswitch or PLC Interface
3	1	Tank Low Level Sensor A
4	1	Tank Low Level Sensor B
1	2	Flow Meter A
2	2	Flow Meter B
3	2	Tank High Level Sensor A
4	2	Tank High Level Sensor B

6. Connect cables to rear of fluid control module. See FIG. 13 and the following table.

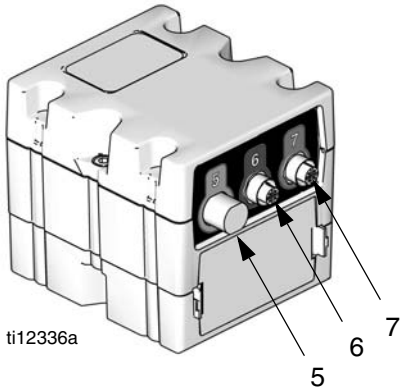

FIG. 13: Fluid Control Module Rear Connections

If there is only one fluid control module on the machine, the module number is 1.
If there are two fluid control modules, the module closest to the air regulator is module number 1 and the other module is number 2.

Connection Reference (FIG. 13)	Module Number	Connects To
5	1	Dispense Valve and Linear Position Sensor
6	1	Pressure Transducer A
7	1	Pressure Transducer B
5	2	Auto-Fill Valve
6	2	Not Used
7	2	Not Used

7. **If there is only one fluid control module on the machine,** set the rotary switch (S) to 1. See FIG. 14. **If there are two fluid control modules,** set the rotary switch (S) to 1 on the module closest to the air regulator and set the rotary switch (S) to 2 on the other module. See FIG. 14.

The rotary switch setting must only be adjusted on new fluid control modules after installation. The rotary switch setting indicates the fluid control module number being replaced. The fluid control module uses a 16-position rotary switch.

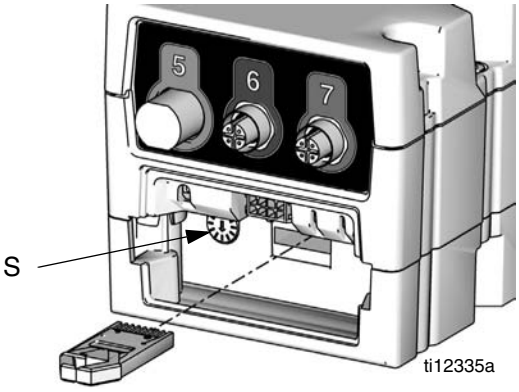

FIG. 14

8. Install access cover (D).

Fuse Replacement

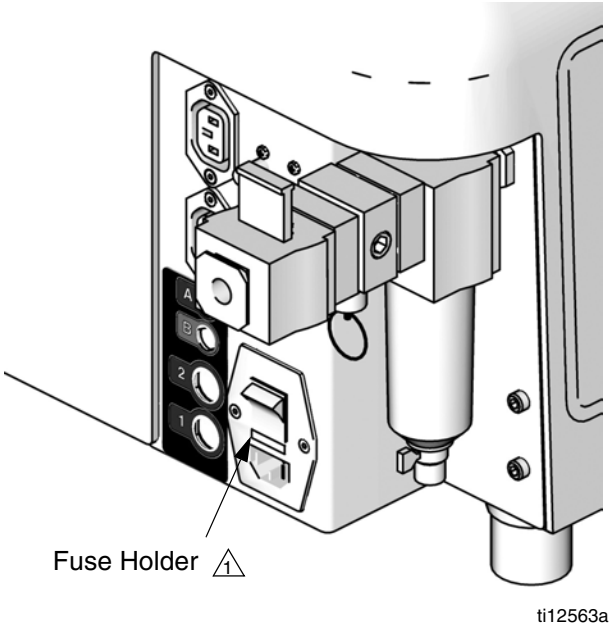

1 Fuse holder is located between the power connector and power switch.

1. Remove incoming power cord from machine.
2. Insert a flat-head screw-driver between the fuse holder and the back of the incoming power bracket remove machine fuse holder.
3. Remove the blown fuse from the machine fuse holder.
4. Install new fuse with same rating into the fuse holder.
5. Install the fuse holder into the Incoming Power Bracket.

Parts

See Feed Systems manual for feed system parts.
See **Related Manuals** on page 3.

Fixed Ratio Base, LC0262, LC0263, LC0264, LC0265

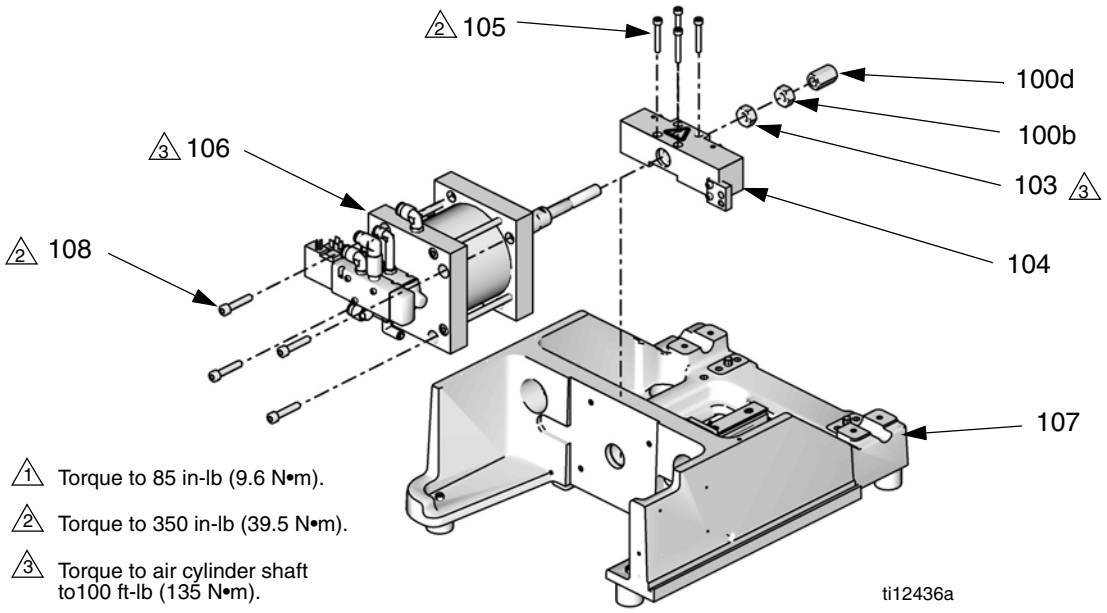

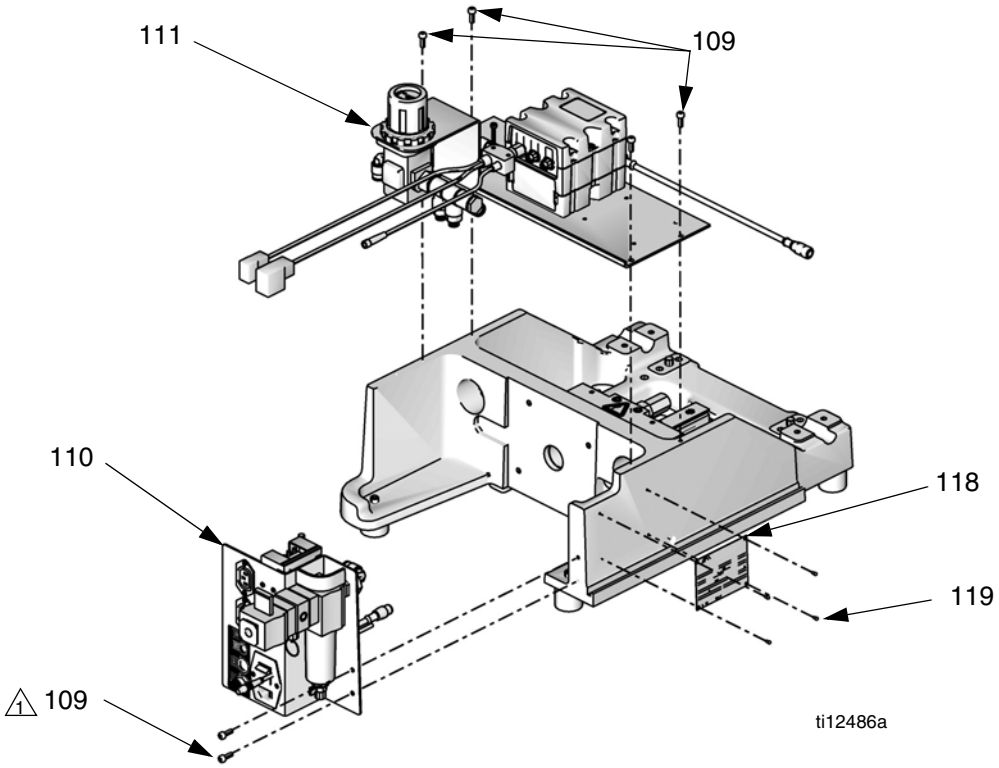

FIG. 15

Fixed Ratio Base, continued

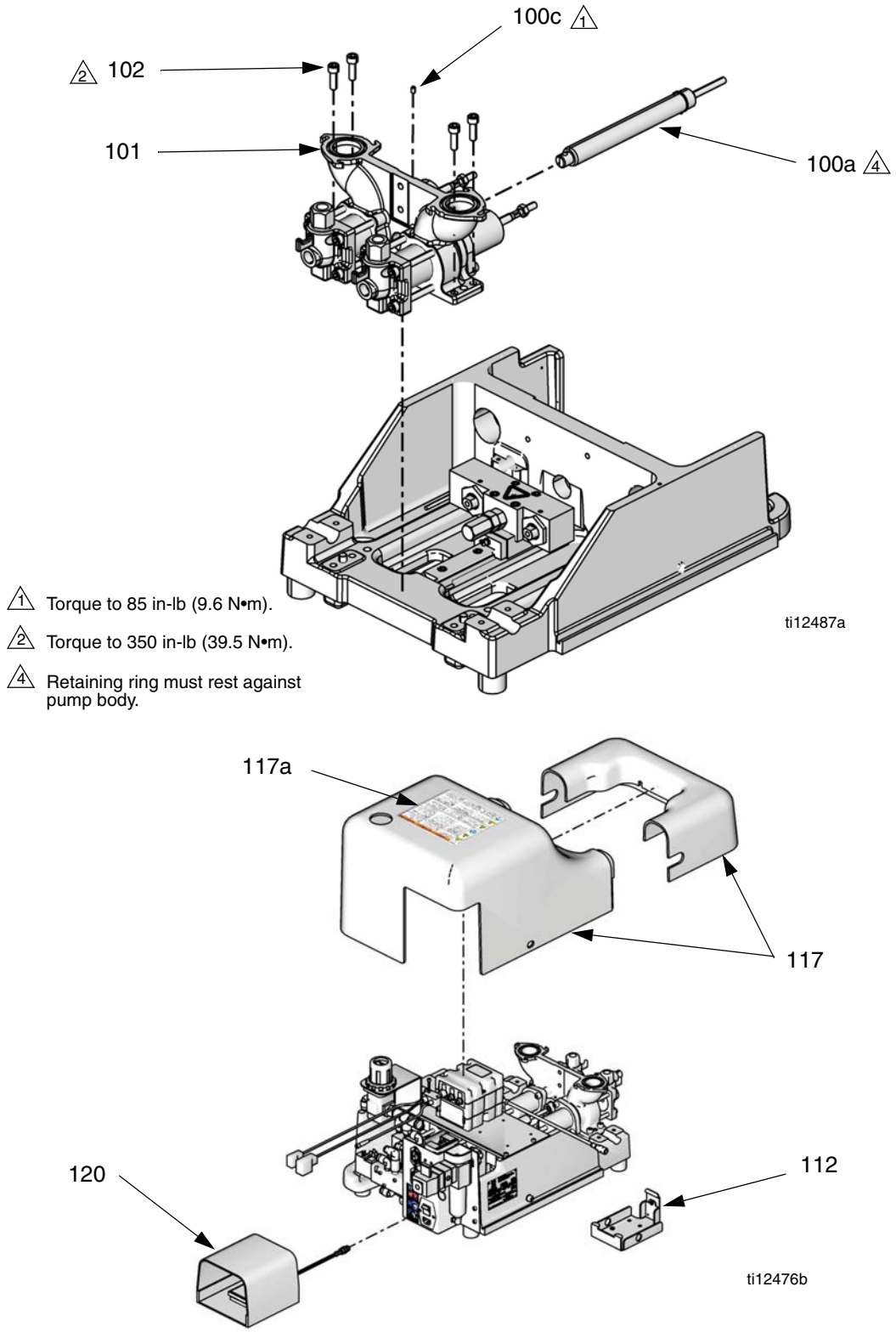

FIG. 16

Ref	Part	Description	Qty
100a	120920	SHOCK ABSORB, adjustable (models LC0263 and LC0265 only)	1
100b	120919	NUT, hex (models LC0263 and LC0265 only)	1
100c	111260	SCREW, set, cup point (models LC0263 and LC0265 only)	1
100d	15K816	CAP, adjustment, Hydracheck (models LC0263 and LC0265 only)	1
101	LC0112	PUMP, sub-assembly	1
102	120913	SCREW	4
103	120919	NUT, hex	1
104	LC0107	BLOCK, assembly, drive	1
105	121166	SCREW	4
106	LC0110	CYLINDER, air, sub-assembly, 3.0 in. (models LC0262 and LC0263 only)	1
	LC0111	CYLINDER, air, sub-assembly, 4.5 in. (models LC0264 and LC0265 only.)	1
107	LC0290	FRAME, sub, assembly	1
108	121167	SCREW	4
109	120885	SCREW	6
110	LC0239	BRACKET, incoming power, sub-assy	1
111	LC0261	BRACKET, controls, assembly	1
112	255235	BRACKET, mounting, assembly	1
114	* 121597	CABLE, CAN, 90 female / 90 female	1
115	* 61/2906-BK/11	TUBE, air, 3/8 in. OD	2
116	* 61/2904-BK/11	TUBE, air, 1/4 in. OD	2
117	LC0308	SHIELD, assembly	1
117a	▲15M511	LABEL, shield	1
118	84/0001-6/11	TAG, ID	1
119	96/0235/98	SCREW, drive, type U, #2 X 3/16 stainless steel	4
120	255244	SWITCH, foot, assembly	1
127	* LC0135	MODULE, TOKEN, PR70	1

* *Not shown.*

▲ *Replacement Danger and Warning labels, tags, and cards are available at no cost.*

Fixed Ratio Frame Sub-Assembly, LC0290

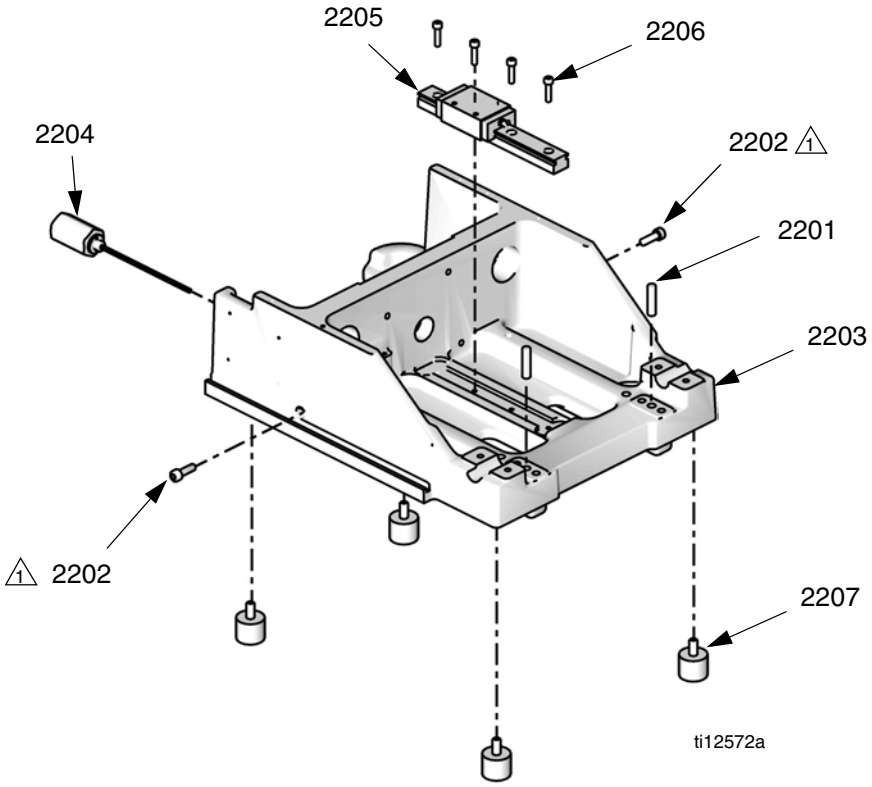

⚠1 Apply anti-seize compound (part 073025) to screws.

FIG. 17

Ref	Part	Description	Qty
2201	120599	PIN, dowel	2
2202	120913	SCREW	2
2203	15K788	FRAME, base, machined	1
2204	LC0234	SENSOR, assembly	1
2205	120918	BEARING, linear, slide	1
2206	120886	SCREW	4
2207	96/0507/11	BUMPER, rubber, 3/8-16 x 0.63	4

Fixed Ratio Drive Block Assembly, LC0107

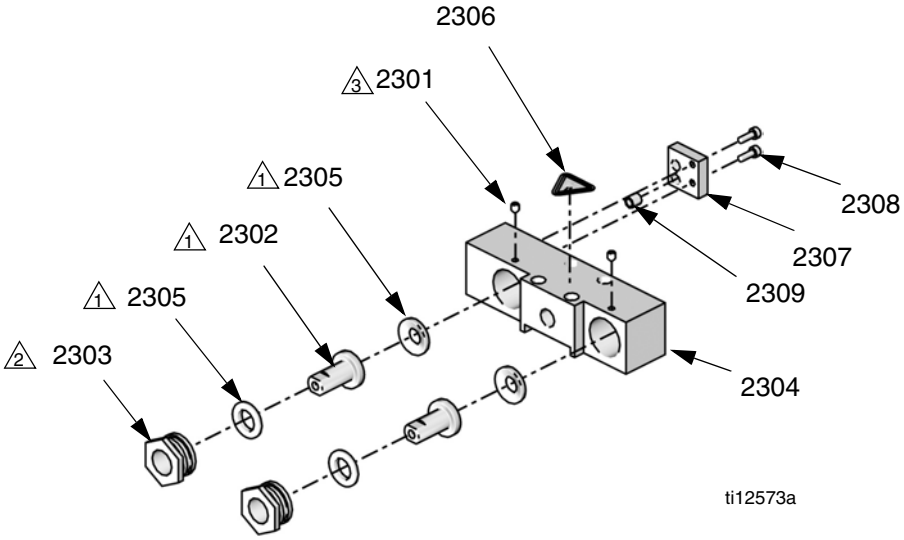

1 Apply grease (part 115982) to all internal parts.

2 Tighten retaining nut until alignment rod (2302) cannot be moved. Loosen retaining nut until alignment rod can move side-to-side with no in-and-out movement.

3 Torque to 64 in-lb (7.2 N•m).

FIG. 18

Ref	Part	Description	Qty
2301	120891	SCREW, set, socket, cone point	2
2302	15K801	ROD, alignment	2
2303	15K802	RETAINER, nut	2
2304	15K805	BLOCK, drive	1
2305	15K868	WASHER, female, male modified, assembly	2
2306 ▲	84/0130-27/11	LABEL, warning, pinch point	1
2307	15T389	BRACKET, mounting, magnet	1
2308	120885	SCREW	2
2309	15G747	MAGNET, linear sensor	1

▲ *Replacement Danger and Warning labels, tags, and cards are available at no cost.*

Variable Ratio Base, LC0242, LC0243, LC0244, LC0245

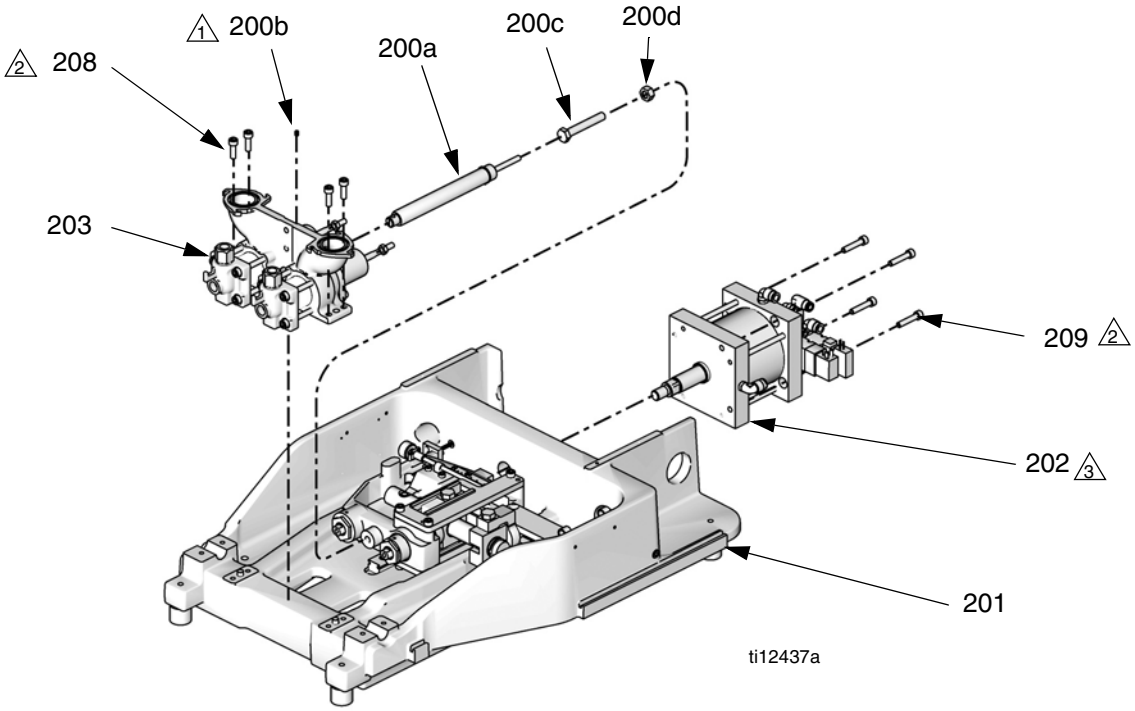

1 Torque to 85 in-lb (9.6 N•m).

2 Torque to 350 in-lb (39.5 N•m).

3 Torque to air cylinder shaft to100 ft-lb (135 N•m).

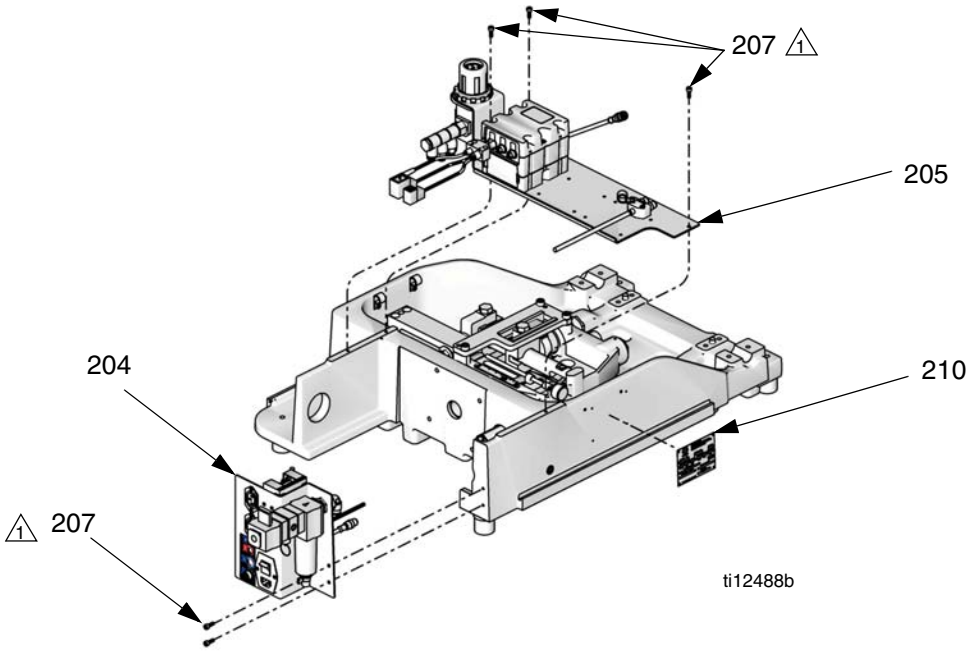

1 Torque to 85 in-lb (9.6 N•m).

FIG. 19

Variable Ratio Base continued

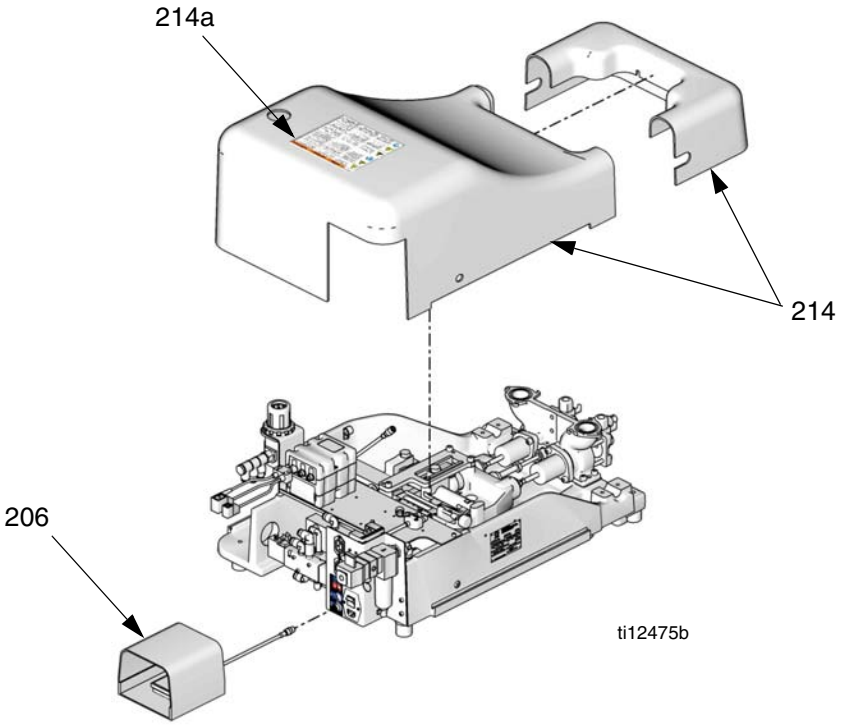

FIG. 20

Ref	Part	Description	Qty
200a	120920	SHOCK ABSORB, adjustable (models LC0243 and LC0245 only)	1
200b	111260	SCREW, set, cup point (models LC0243 and LC0245 only)	1
200c	121589	SCREW, hex head cap, M12 x 1.75, 80 mm long (models LC0243 and LC0245 only)	1
200d	107539	NUT, hex (models LC0243 and LC0245 only)	1
201	LC0232	FRAME, sub-assembly	1
202	LC0230	CYLINDER, air, 3.0 in. diameter (models LC0242 and LC0243 only)	1
	LC0231	CYLINDER, air, 4.5 in. diameter (models LC0244 and LC0245 only)	1
203	LC0112	PUMP, sub-assembly	1
204	LC0239	BRACKET, incoming power, sub-assy	1
205	LC0240	BRACKET, control, sub-assembly	1
206	255244	SWITCH, foot, assembly	1
207	120885	SCREW	5
208	120913	SCREW	4
209	121167	SCREW	4
210	16D782	LABEL	1
212	61/2904-BK/11	HOSE, 0.160 ID x 0.250 OD, PU, 95 DUR	1
213	61/2906-BK/11	HOSE, 0.245ID x 0.375 OD, PU, 95 DUR	1
214	LC0246	SHIELD, assembly	1
214a	▲15M511	LABEL, shield	1
215	* 124002	PROTECTOR, wire, corrugated, 5/8 in. ID	8
	* 124002	PROTECTOR, wire, corrugated, 5/8 in. ID	5

* *Not shown.*

▲ *Replacement Danger and Warning labels, tags, and cards are available at no cost.*

Variable Ratio Frame Sub-Assembly, LC0232

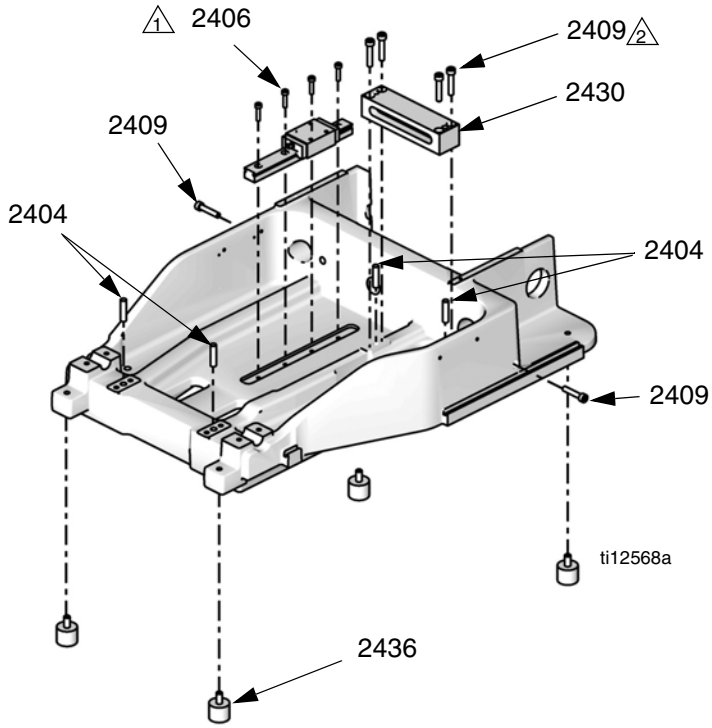

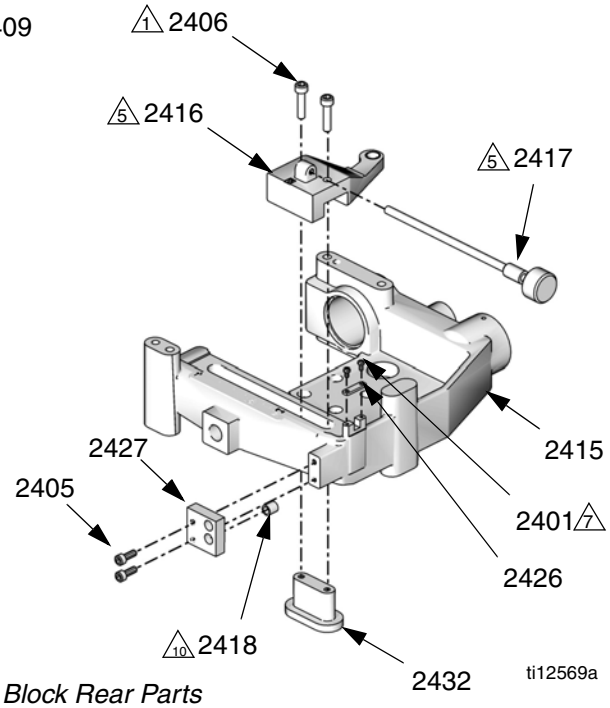

Drive Block Rear Parts

1. Torque screws to 140 in-lb (15.8 N•m).
2. Torque screws to 350 in-lb (39.5 N•m).
3. Torque stud to 780 in-lb (88.1 N•m).
4. Ref 2414 and 2428 must be oriented as shown.
5. Lubricate bearing and threaded surfaces with 115982.
6. Torque to 35 in-lb (3.9 N•m).
7. Torque to 8 in-lb (0.9 N•m).
8. Tighten retaining nut until alignment rod (2419) cannot be moved. Then loosen retaining nut until alignment rod can move side to side with no in-and-out movement.
9. Torque to 19 in-lb (2.1 N•m).
10. Bond 2418 into 2427 using adhesive, part 071023.
11. Press fit 2403 into 2424.

FIG. 21

Variable Ratio Frame Sub-Assembly continued

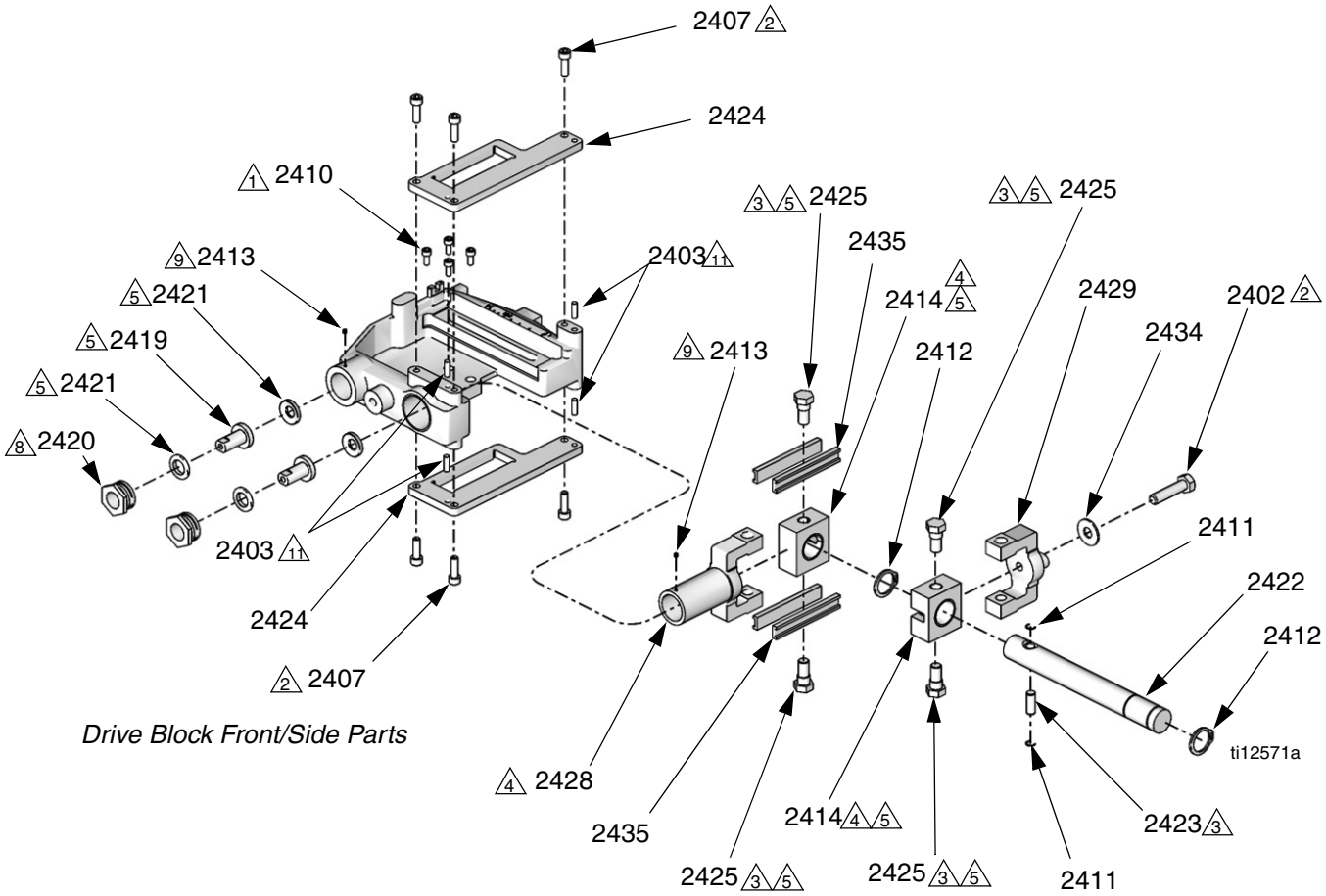

1 Torque screws to 140 in-lb (15.8 N•m).

2 Torque screws to 350 in-lb (39.5 N•m).

3 Torque stud to 780 in-lb (88.1 N•m).

4 Ref 2414 and 2428 must be oriented as shown.

5 Lubricate bearing and threaded surfaces with 115982.

6 Torque to 35 in-lb (3.9 N•m).

7 Torque to 8 in-lb (0.9 N•m).

8 Tighten retaining nut until alignment rod (2419) cannot be moved. Then loosen retaining nut until alignment rod can move side to side with no in-and-out movement.

9 Torque to 19 in-lb (2.1 N•m).

10 Bond 2418 into 2427 using adhesive, part 071023.

11 Press fit 2403 into 2424.

FIG. 22

Ref	Part	Description	Qty
2401	119912	SCREW, machined, phillips pan head	2
2402	107596	SCREW, cap, hex head	1
2403	116193	PIN, dowel, 1/4 x 3/4	4
2404	120599	PIN, dowel	4
2405	120885	SCREW	2
2406	120886	SCREW	6
2407	120913	SCREW	6
2408	120918	BEARING, linear, slide	1
2409	121167	SCREW	6
2410	121518	SCREW, socket head cap	4
2411	121524	RING, retaining	2
2412	121529	RING, retaining,1-1/8 in., snap	2
2413	121530	SCREW, set, socket head cap, M4 x 5, cone point	2
2414	256264	BLOCK, assembly, slide, beam, ratio	2
2415	256268	CARRIAGE, assembly, slide, beam, ratio	1
2416	256280	ARM, assembly, adjustment	1
2417	256288	KNOB, ratio adjustment	1
2418	15G747	MAGNET, linear sensor	1
2419	15K801	ROD, alignment	2
2420	15K802	RETAINER, nut	2
2421	15K868	WASHER, female, male modified, assembly	2
2422	15T377	BAR, ratio, beam	1
2423	15T383	PIN, pivot, beam, ratio	1
2424	15T384	PLATE, guide, ratio	2
2425	15T385	STUD, clevis, beam	4
2426	15T388	RETAINER, knob, adjust	1
2427	15T389	BRACKET, mounting, magnet	1
2428	15T448	CLEVIS, moving, machined	1
2429	15T449	CLEVIS, fixed, machined	1
2430	15T463	BRACKET, bar, pivot	1
2431	15T626	FRAME, base, machined	1
2432	15T715	NUT, locking, ratio adjustment	1
2433	LC0234	SENSOR, assembly	1
2434	119438	WASHER, flat	1
2435	15U196	BEARING, strip	4
2436	121573	BUMPER, urethane, 3/8-16	4
2499 ▲	* 84/0130-27/11	LABEL, warning, pinch point	1

* *Not shown.*

▲ *Replacement Danger and Warning labels, tags, and cards are available at no cost.*

Air Cylinder, LC0110, LC0111, LC0230, LC0231

NOTICE

The four long screws (404) that attach the two drive blocks (417, 418) must be tightened in a crisscross pattern. Failure to do so may result in air cylinder damage.

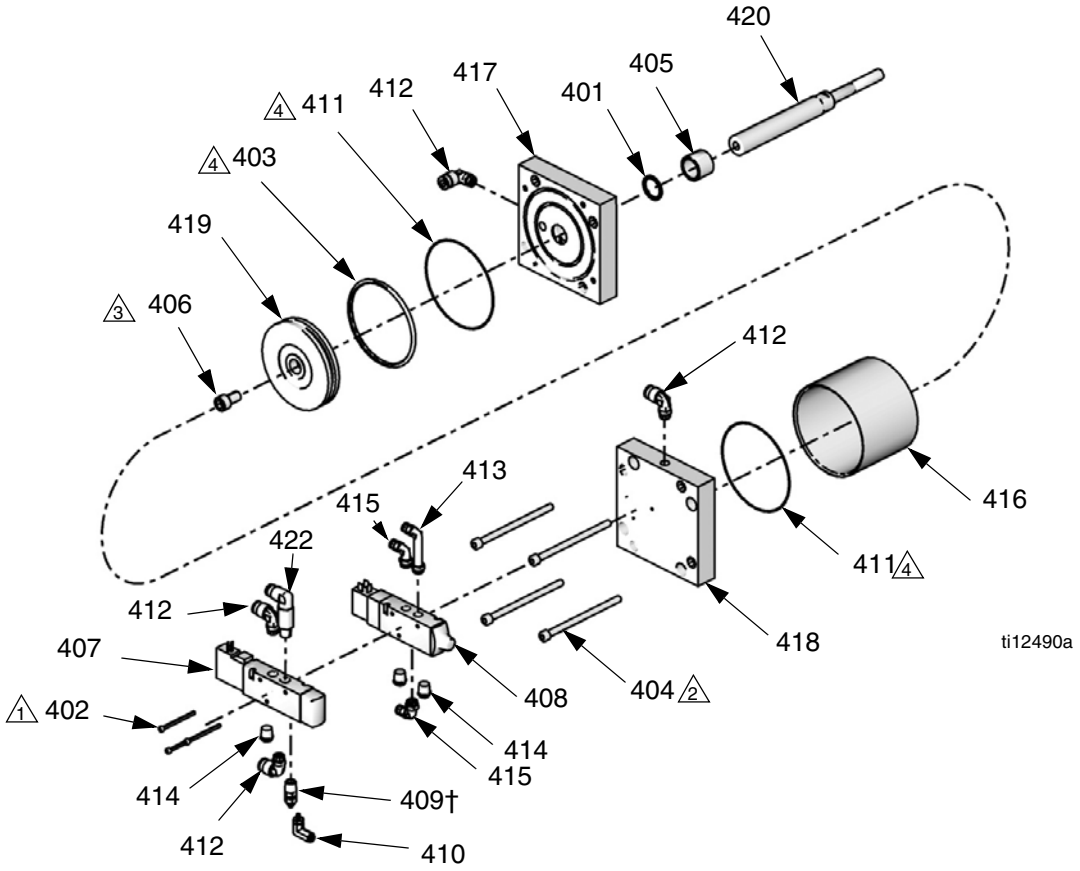

1 Torque to 41 in-lb (4.6 N•m).

2 Torque to 350 in-lb (39.5 N•m).

3 Torque to 100 ft-lb (135 N•m).

4 Coat all sliding surfaces with lubricant, part 115982.

5 Apply sealant tape to npt fittings.

Ref	Part	Description	Qty
401	107571	PACKING, o-ring	1
402	114100	SCREW, cap, socket hd	3
403	120875	O-RING, 3 in. (assemblies LC0110 and LC0230)	1
	104131	O-RING, 4.5 in. (assemblies LC0111 and LC0231)	1
404	120880	SCREW	4
405	120881	BEARING	1
406	120884	SCREW	1
407	120899	VALVE, solenoid, 3 way	1
408	120900	VALVE, solenoid, 3 way	1
409 †	120922	MUFFLER, w/ integral flow control	1
410	120923	FITTING, elbow, male, swivel	1
411	120932	O-RING (assemblies LC0110 and LC0230 only)	2
	104271	PACKING, o-ring (assemblies LC0111 and LC0231 only)	2
412	121018	FITTING, elbow, male, swivel, 1/4 npt	5
413	121020	FITTING, elbow, male, swivel, 1/4 npt	1
414	121021	MUFFLER, 1/4 npt	3
415	121022	FITTING, elbow, male, 1/4 npt	2
416	15K790	TUBE, air, cylinder, 3.0 (assemblies LC0110 and LC0230 only)	1
	15K789	TUBE, air, cylinder, 4.5 (assemblies LC0111 and LC0231 only)	1
417	15K791	BLOCK, air cylinder, rod end	1
418	15K792	BLOCK, air cylinder, blind end	1
419	15K793	PISTON (assemblies LC0110 and LC0230 only)	1
	15K794	PISTON (assemblies LC0111 and LC0231 only)	1
420	15K795	ROD, piston, air cylinder (assemblies LC0110 and LC0111 only)	1
	15T714	ROD, piston, air cylinder (assemblies LC0230 and LC0231 only)	1
422	121643	FITTING, elbow, 1/4 x 1/4 npt, swivel, ext (assemblies LC0230 and LC0231 only)	1

† *When replacing the muffler, adjust the muffler setting so that the pistons take approximately 1/2 to 1 second to retract.*

Pump Sub-Assembly, LC0112

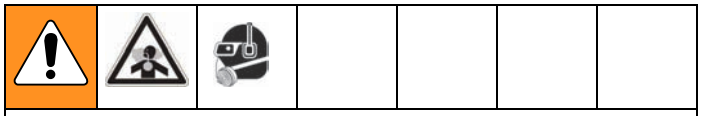

The pump shaft is installed with Krytox. Contact with Krytox can lead to flu-like symptoms. The MSDS for this material is available upon request.

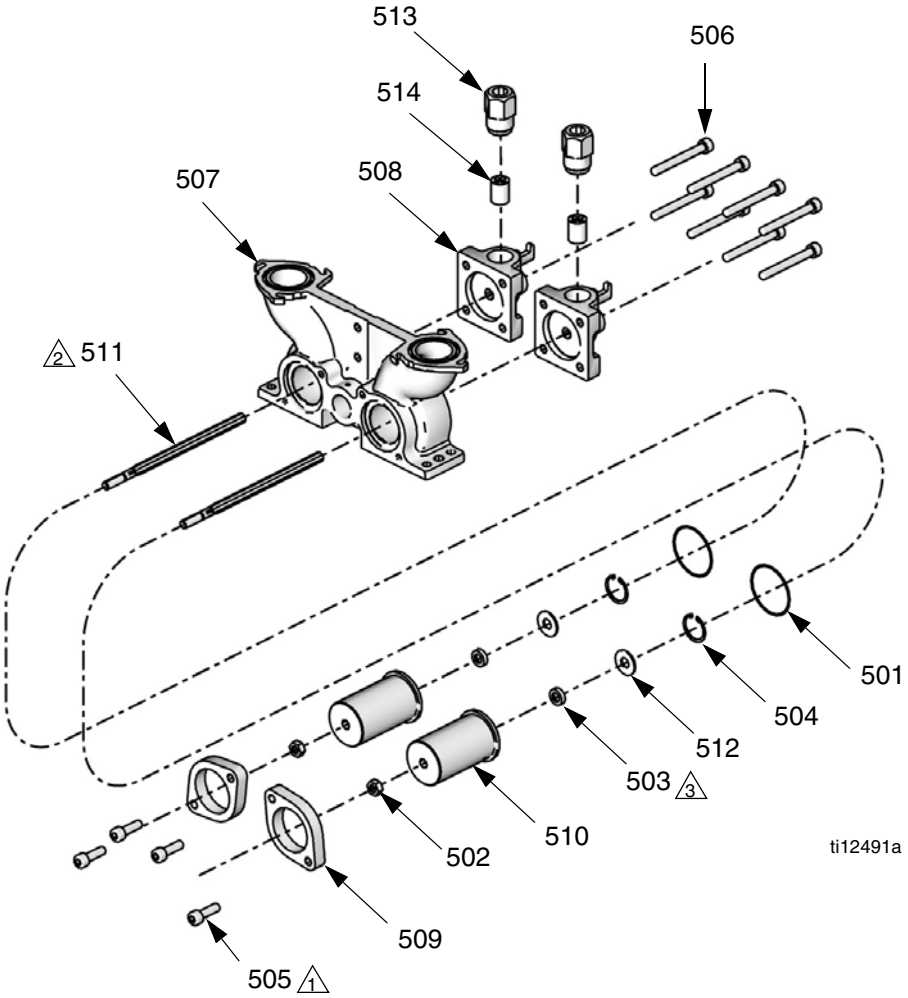

1 Torque to 350 in-lb (39.5 N•m).

2 Lube shaft with krytox grease prior to insertion into bearing.

3 Shaft seal (503) must be installed with open side facing the washer (512).

Ref	Part	Description	Qty
501	106258	PACKING, o-ring	2
502	108712	NUT, hex	2
503	120887	SEAL, posipak, 3/8 x 5/8, uhmwpe	2
504	120890	RING, retaining	2
505	120913	SCREW	4
506	120982	SCREW	8
507	15K786	HOUSING, pump	1

Ref	Part	Description	Qty
508	15K787	CAP, end, pump, machined	2
509	15K803	COLLAR	2
510	15K804	HOUSING, bearing, seal	2
511	15K824	ROD, piston	2
512	15K828	WASHER, housing, seal	2
513	15K895	HOUSING, check valve	2
514	LC0093	KIT, rebuild, valve, check	2

Check Valve, Assembly LC0093

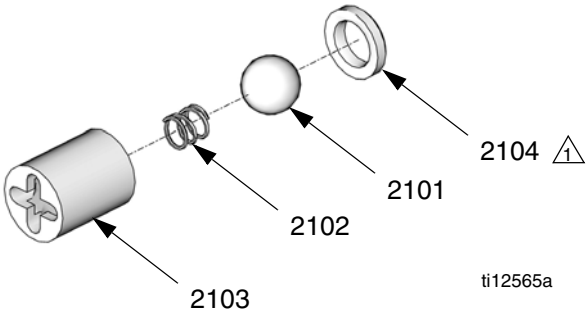

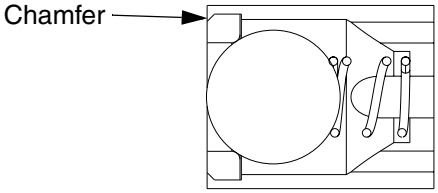

⚠1 The side of the seat with an outside diameter chamfer must point away from the ball.

Ref	Part	Description	Qty
2101	105445	BALL, 0.5000	1
2102	121084	SPRING	1
2103	15D312	BUSHING, ball guide	1
2104	196832	SEAT, lapped	1

Control Bracket, LC0240, LC0261

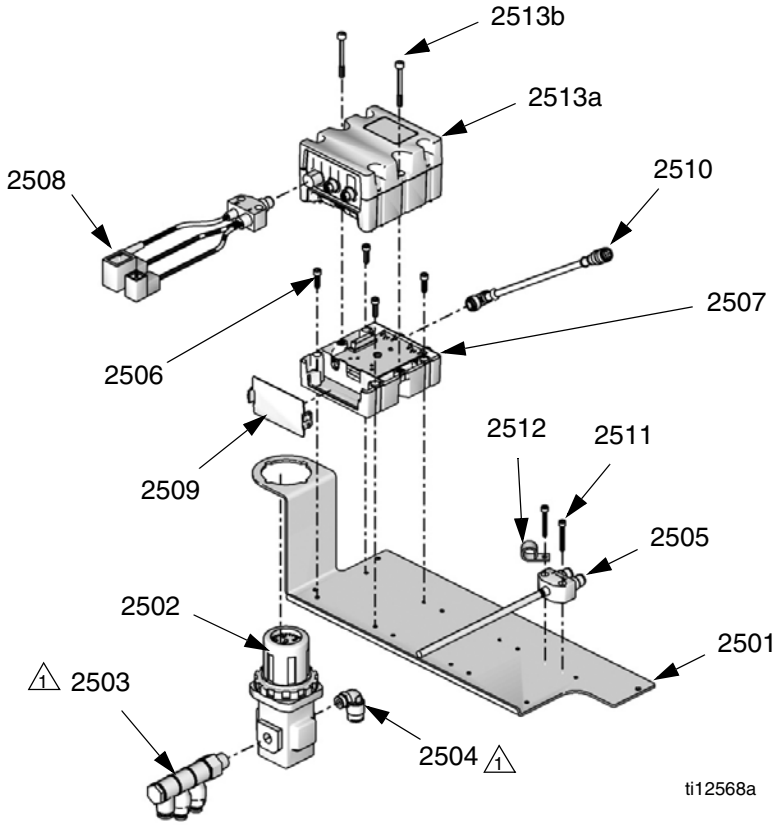

Assembly LC0240 Shown

1 Apply thread sealant tape to male npt threads.

Ref	Part	Description	Qty
2501	15T735	BRACKET, control mounting (assembly LC0240 only)	1
	15U737	BRACKET, control mounting (assembly LC0261 only)	1
2502	120897	REGULATOR, air, with integral gage	1
2503	120954	MANIFOLD, inlet, banjo	1
2504	121018	FITTING, elbow, male, swivel,1/4 NPT	1
2505	LC0291	CABLE, power (assembly LC0240 only)	1
2506	113003	SCREW, socket head cap,10-32 x 0.62, stainless steel	4

Ref	Part	Description	Qty
2507	289697	BASE, Fluid Control Module	1
2508	121583	HARNESS, I/O, M12 x M8 x sub-micro x mini	1
2509	277674	ENCLOSURE, cube door	1
2510	121685	CABLE, CAN, M12 x M12, 5P, female-female, straight x right	1
2511	121860	SCREW, M4 x 0.7, 30 mm long, stainless steel	2
2512	84/0153-1/89	CLAMP, harness, nylon	1
2513◆	289696	MODULE, Fluid Control, assembly	1

* *Not shown.*

▲ *Replacement Danger and Warning labels, tags, and cards are available at no cost.*

◆ *When purchasing a replacement fluid control module, software token 15W046 is required to install software before first use.*

Incoming Power Bracket, LC0239

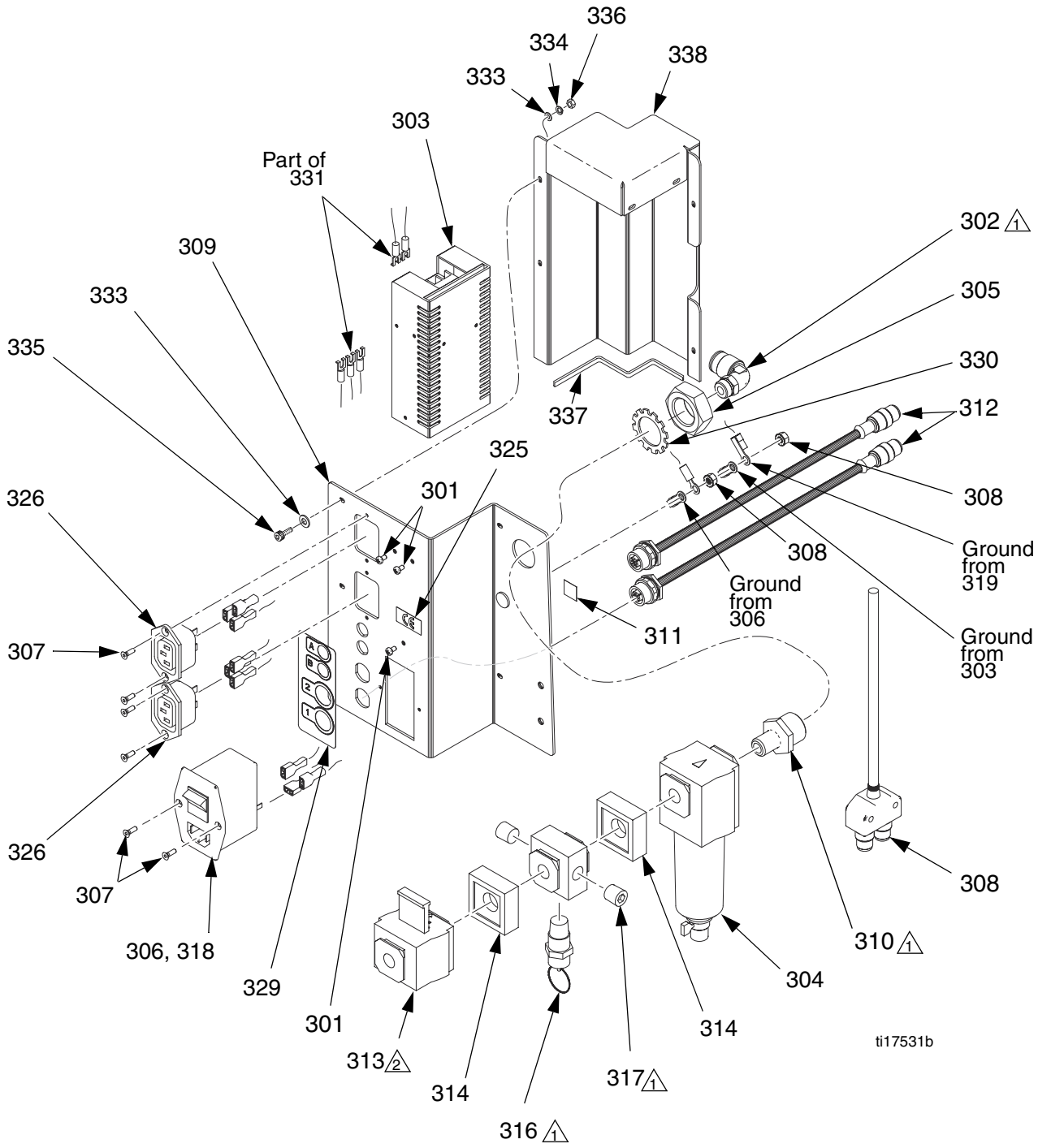

1 Apply thread sealant tape if applicable.

2 Vent direction must point toward machine.

Ref	Part	Description	Qty
301	119912	SCREW, mach. phillips pan hd.	3
302	121018	FITTING, elbow, male, swivel, 1/4 npt	1
303	120876	POWER SUPPLY	1
304	120882	FILTER	1
305	120883	NUT	1
306	120910	SOCKET, electrical, with EMI filter	1
307	120916	SCREW	6
308	120993	NUT, hex, M5, with tooth washer	2
309	15U738	BRACKET, incoming power	1
310	15K800	FITTING, bulkhead	1
311	* 84/0130-26/11	LABEL, symbol, pe	1
312	121581	HARNESS, I/O, M12 x M12	2
313	121178	VALVE, 1/4 in. OSHA lockout	1
314	121179	CLAMP	2
315	* 121180	MANIFOLD	1
316	94/0762/99	VALVE, safety, blow-off, 100 psi	1
317	94/0430/99	PLUG, pipe, 1/4 npt	2
318	81/1054-4/11	FUSE, type f, 4 amp, 250v, fast	2
319	LC0291	CABLE, power, assembly	1
325	* 84/2725-1/11	LABEL, symbol, CE	1
326	121558	CONNECTOR, power, panel mount	2
329	15V092	LABEL, bracket, incoming, power	1
330	104395	WASHER, lock, tooth, external	1
331	24F228	HARNESS, wire	1
332	---	SEALANT, pipe	1
333	122664	WASHER, back-up	8
334	100068	WASHER, lock, spring	4
335	125609	FASTENER, screw, shcs, M3 x 0.5 x 10, stainless steel	4
336	125104	NUT, hex, M3	4
337	114225	TRIM, edge protection	0.5
338	24J864	PARTITION, power	1

* *Not shown.*

--- *Not for sale.*

Piston Package

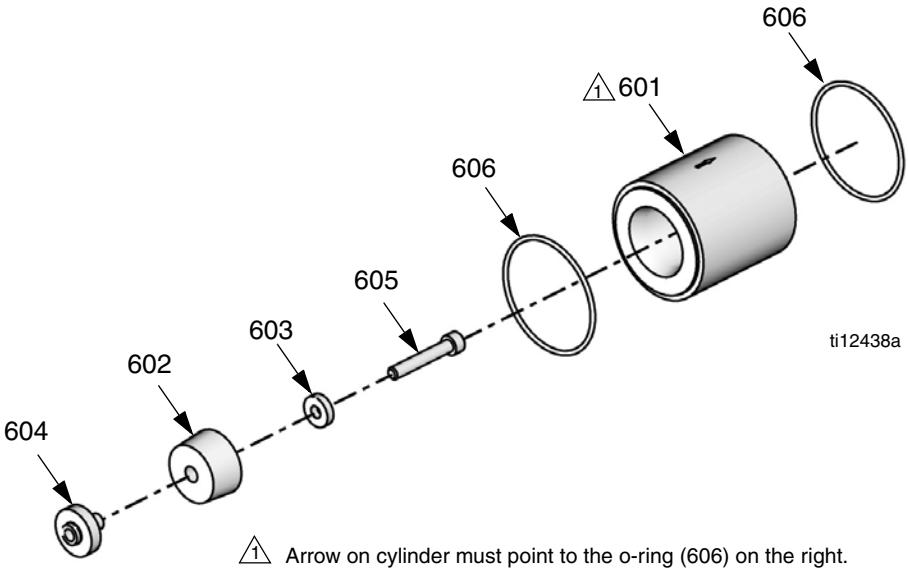

Nylon Piston, Stainless Steel Metering Tube Assemblies

Piston Package	Reference Number and Description					
	601	602	603†	604	605	606
	Tube, pump	Nylon Piston	Washer	Ring, support, piston	Screw	O-ring
LC1080	LCC080	LCB080	15M089		120933	120874
LC1100	LCC100	LCB100				
LC1120	LCC120	LCB120				
LC1140	LCC140	LCB140				
LC1160	LCC160	LCB160	15M099	15K887		
LC1180	LCC180	LCB180				
LC1200	LCC200	LCB200				
LC1220	LCC220	LCB220				
LC1240	LCC240	LCB240				
LC1260	LCC260	LCB260				
LC1280	LCC280	LCB280				
LC1300	LCC300	LCB300	15M100			
LC1320	LCC320	LCB320		15K888		
LC1340	LCC340	LCB340				
LC1360	LCC360	LCB360				
LC1400	LCC400	LCB400				
LC1440	LCC440	LCB440				
LC1480	LCC480	LCB480				
LC1520	LCC520	LCB520				
LC1560	LCC560	LCB560				
LC1600	LCC600	LCB600				
LC1640	LCC640	LCB640				
LC1720	LCC720	LCB720	15M101	15K890		
LC1800	LCC800	LCB800				
LC1880	LCC880	LCB880				
LC1960	LCC960	LCB960				
Quantity	1	1	1	1	1	2

UHMW Piston, Stainless Steel Metering Tube Assemblies

Piston Package	Reference Number and Description					
	601	602	603†	604	605	606
	Tube, pump	UHMW Piston	Washer	Ring, support, piston	Screw	O-ring
LC2160	LCC160	LCA160	15M099	15K887	120933	120874
LC2180	LCC180	LCA180				
LC2200	LCC200	LCA200				
LC2220	LCC220	LCA220				
LC2240	LCC240	LCA240				
LC2260	LCC260	LCA260				
LC2280	LCC280	LCA280				
LC2300	LCC300	LCA300	15M100			
LC2320	LCC320	LCA320		15K888		
LC2340	LCC340	LCA340				
LC2360	LCC360	LCA360				
LC2400	LCC400	LCA400				
LC2440	LCC440	LCA440				
LC2480	LCC480	LCA480				
LC2520	LCC520	LCA520				
LC2560	LCC560	LCA560				
LC2600	LCC600	LCA600				
LC2640	LCC640	LCA640		15K890		
LC2720	LCC720	LCA720	15M101			
LC2800	LCC800	LCA800				
LC2880	LCC880	LCA880				
LC2960	LCC960	LCA960				
Quantity	1	1	1	1	1	2

UHMW Piston, Ceramic Metering Tube Assemblies

NOTE: The UHMW piston, ceramic metering tube assemblies contain a carbide ball. This ball replaces the standard check valve ball in pump assembly LC0112. If a UHMW piston, ceramic metering tube assembly needs to be installed, replace the original ball in pump assembly LC0112 with the ball included with the pump package. See **Check Valve Rebuild Kit Installation** on page 36 for installation instructions.

	Reference Number and Description						
	601	602	603†	604	605	606	607
Piston Package	**Tube, pump**	**UHMW Piston**	**Washer**	**Ring, support, piston**	**Screw**	**O-ring**	**Carbide Ball**
LC3160	LCG160	LCA160	15M099	15K887	120933	120874	116166
LC3180	LCG180	LCA180					
LC3200	LCG200	LCA200					
LC3220	LCG220	LCA220					
LC3240	LCG240	LCA240					
LC3260	LCG260	LCA260					
LC3280	LCG280	LCA280					
LC3300	LCG300	LCA300	15M100				
LC3320	LCG320	LCA320		15K888			
LC3340	LCG340	LCA340					
LC3360	LCG360	LCA360					
LC3400	LCG400	LCA400					
LC3440	LCG440	LCA440					
LC3480	LCG480	LCA480					
LC3520	LCG520	LCA520					
LC3560	LCG560	LCA560					
LC3600	LCG600	LCA600					
LC3640	LCG640	LCA640		15K890			
LC3720	LCG720	LCA720	15M101				
LC3800	LCG800	LCA800					
LC3880	LCG880	LCA880					
LC3960	LCG960	LCA960					
Quantity	1	1	1	1	1	2	1

† For custom piston packages, washer (603) part number will change by piston size as follows:
For piston sizes 80-100cc: 15M089
For piston sizes 101-159cc: Washer not used.
For piston sizes 160-285cc: 15M099
For piston sizes 286-646cc: 15M100
For piston sizes 647-960cc: 15M101

Nylon and UHMW Piston Replacement Kits

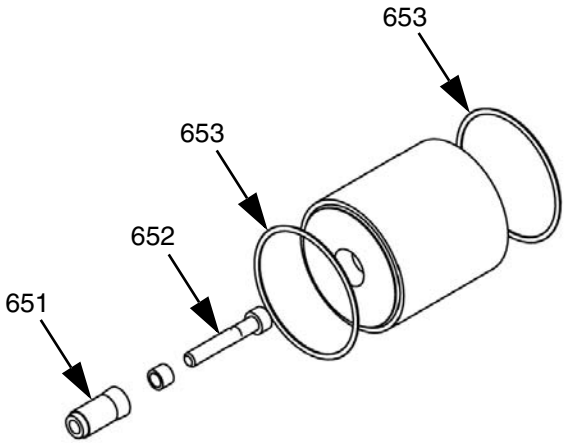

Piston Sizes 080-119

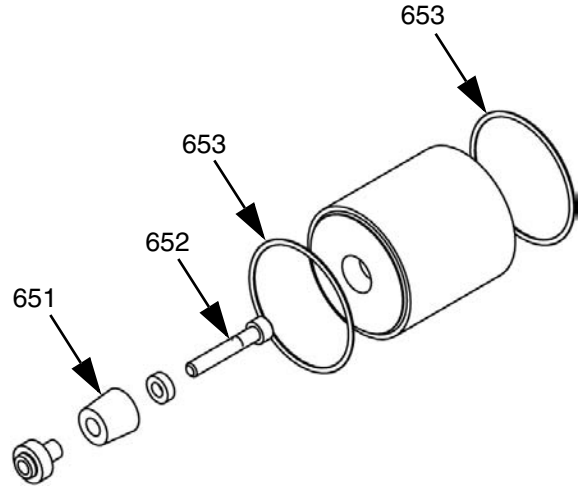

Piston Sizes 160-960

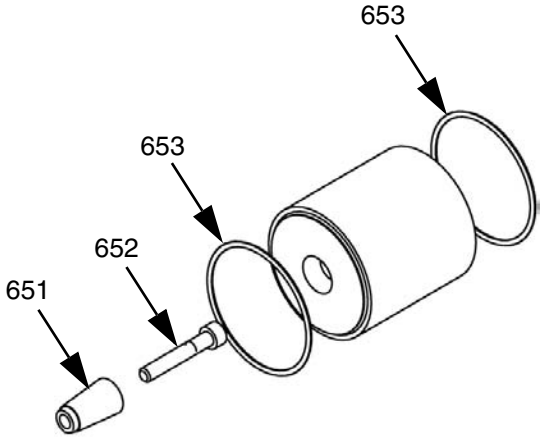

Piston Sizes 120-159

Ref	Part	Description	Qty
651		PISTON	1
652		SCREW	1
653		O-RING	2

When ordering a piston replacement kit, the following intelligent part numbering system applies for Nylon based pistons.

LCF - 160
Code: A
Piston Size (mm^2)

When ordering a UHMW replacement kit, the following numbering applies:

LCE - 160
Code: A
Piston Size (mm^2)

The items indicated above will be supplied with the kit. See the **Product Configurator** section beginning on page 4 for available standard piston sizes.

Controls

There are three options for controls.

- Advanced Display Module with one Fluid Control Module, LC0274★
- Advanced Display Module with two Fluid Control Modules, LC0275★
- Standard Display Module with one Fluid Control Module, LC0272

FIG. 23: Advanced Display Module, 24E451

★ *A protective, membrane shield 15V551 is available for the screen and softkeys of the Advanced Display Module.*

Fluid Control Module

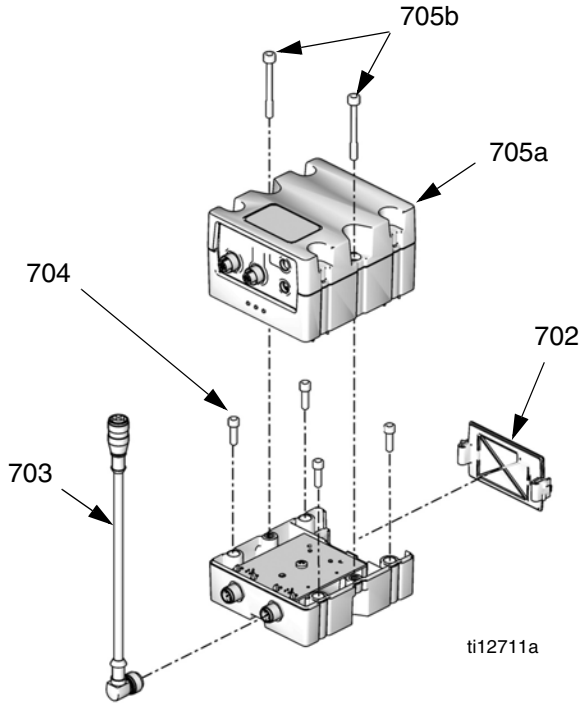

Ref	Part	Description	Qty
701	289697	MODULE, base	1
702	277674	ENCLOSURE, door	1
703	121597	CABLE, CAN, 90 female / 90 female	1
704	113003	SCREW, socket head cap, 10-32 x 0.62, stainless steel	4
705◆	289696	MODULE, assembly, Fluid Control Module	1

◆ *When purchasing a replacement fluid control module, software token 15W046 is required to install software before first use.*

Applicator Mounting

Assemblies with Base Clamp

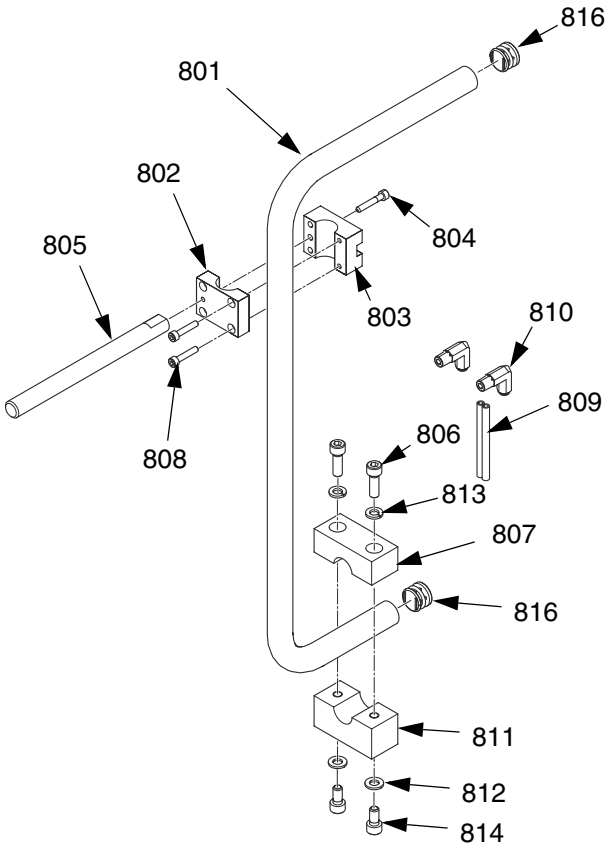

Assemblies with Upper Clamp

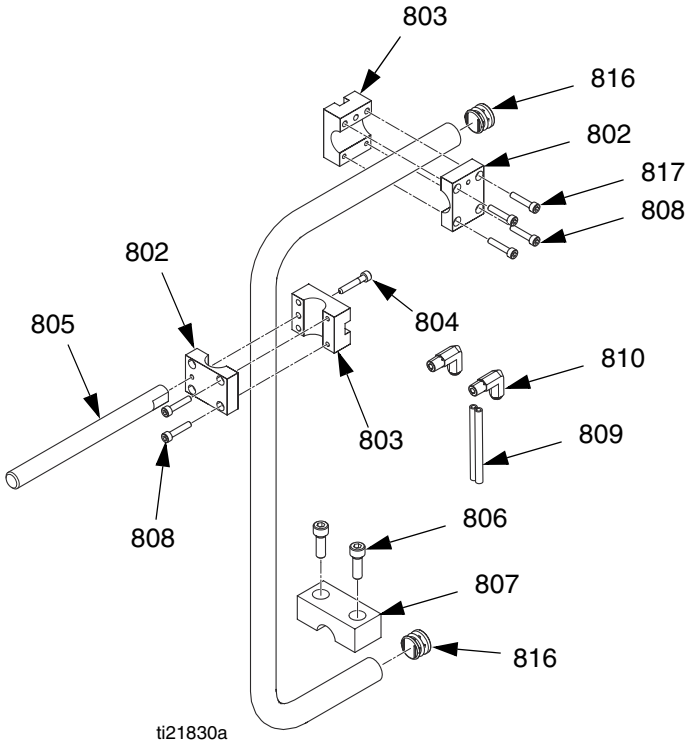

Ref	Part	Description	Qty
801	16P082	BASE, arm, mounting	1
802	16P409	BLOCK, mounting, front	2
803	16P550	BLOCK, mounting, rear	2
804	121194	SCREW	1
805	15K832	ARM, mounting, display	1
806	120913	SCREW	2
807	15M658	CLAMP	1
808	121013	SCREW, socket head cap, M5-0.8 x 25, mild steel	4
809	121046	TUBE, 1/4 x 1/4 twin, polyurethane	6
810	94/0705-1/96	FITTING, elbow, swivel, 1/4 tube x 1/8 npt	2
811	15U176	CLAMP, base (assemblies 256438 and LC0293 only)	1
812	120908	WASHER, plain M8 (assemblies 256438 and LC0293 only)	2
813	96/0045/98	WASHER, lock, split, 5/16 in., stainless steel (assemblies 256438 and LC0293 only)	2
814	120913	SCREW (assemblies 256438 and LC0293 only)	2
815	* 121003	CABLE, CAN, female / female 3.0 m (assemblies 256438 and LC0293 only)	1
816	126510	PLUG, round, finishing, 7/8 in.	2
817	121273	SCREW, socket head cap, 0.8 x 35, mild steel	2

* *Not shown.*

Dispense Valve

Standard Dispense Valves, 255179 and 255181

See MD2 manual for parts information. See **Related Manuals** on page 3.

Gun Mounted MD2 Valves, LC0120 and LC0122

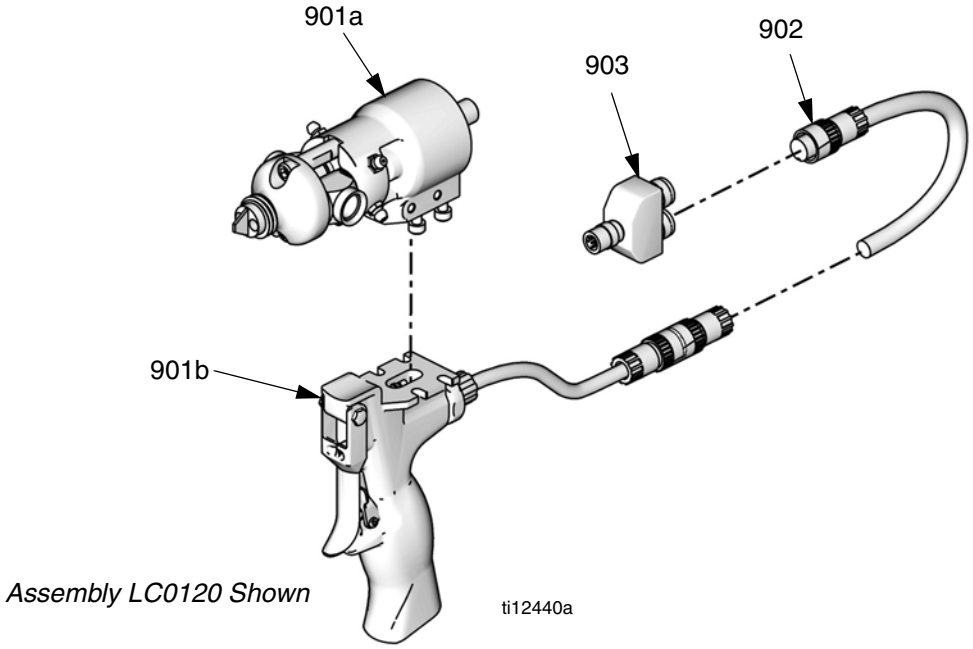

Assembly LC0120 Shown

Ref	Part	Description	Qty
901	LC0006	VALVE, assembly, 10:1, gun, electric (assembly LC0122 only)	1
	LC0004	VALVE, assembly, 1:1, gun, electric (assembly LC0120 only)	1
901a	† 255181	VALVE, dispense, 10:1, soft seats (assembly LC0122 only)	1
	† 255179	VALVE, dispense, 1:1, soft seats (assembly LC0120 only)	1
901b	255208	HANDLE, 2K dispense valve, electric	1
902	121198	CORD, euro, male, 4 pin, 3 wire, 6 m (Series A Handles only)	1
	123660	CORD, euro, male/female, 6 m (Series B Handles only)	1
903	120953	CONNECTOR, splitter	1

† *See MD2 manual for dispense valve and dispense valve handle parts information. See **Related Manuals** on page 3.*

Lever Actuated MD2 Valves, LC0121 and LC0123

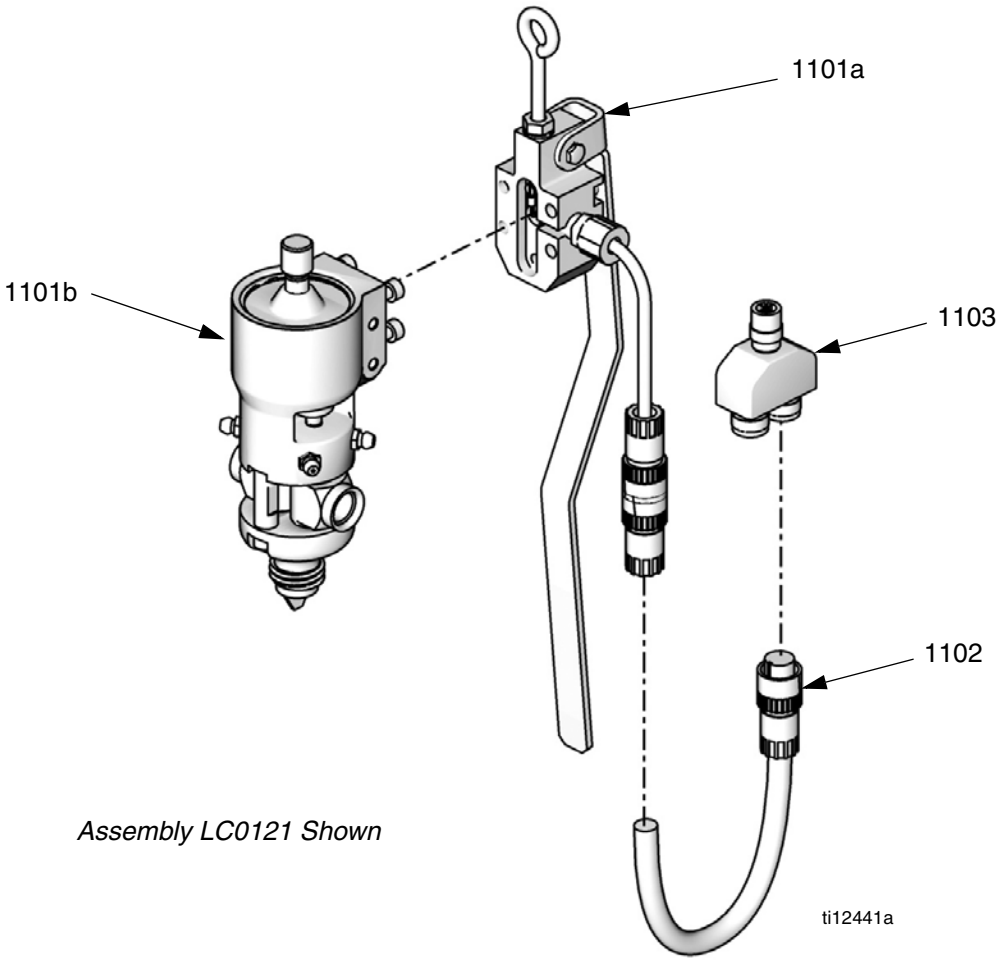

Assembly LC0121 Shown

Ref	Part	Description	Qty
1101	LC0005	VALVE, assembly, 1:1, lever, electric (assembly LC0121 only)	1
	LC0007	VALVE, assembly, 10:1, lever, electric (assembly LC0123 only)	1
1101a	255249	LEVER, 2K dispense valve	1
1101b	† 255181	VALVE, dispense, 10:1, soft seats (assembly LC0123 only)	1
	† 255179	VALVE, dispense, 1:1, soft seats (assembly LC0121 only)	1
1102	121198	CORD, euro, male, 4 pin, 3 wire, 6 m (Series A Handles only)	1
	123660	CORD, euro, male/female, 6 m (Series B Handles only)	1
1103	120953	CONNECTOR, splitter	1

† *See MD2 manual for dispense valve and dispense valve lever parts information. See* ***Related Manuals*** *on page 3.*

Mixers

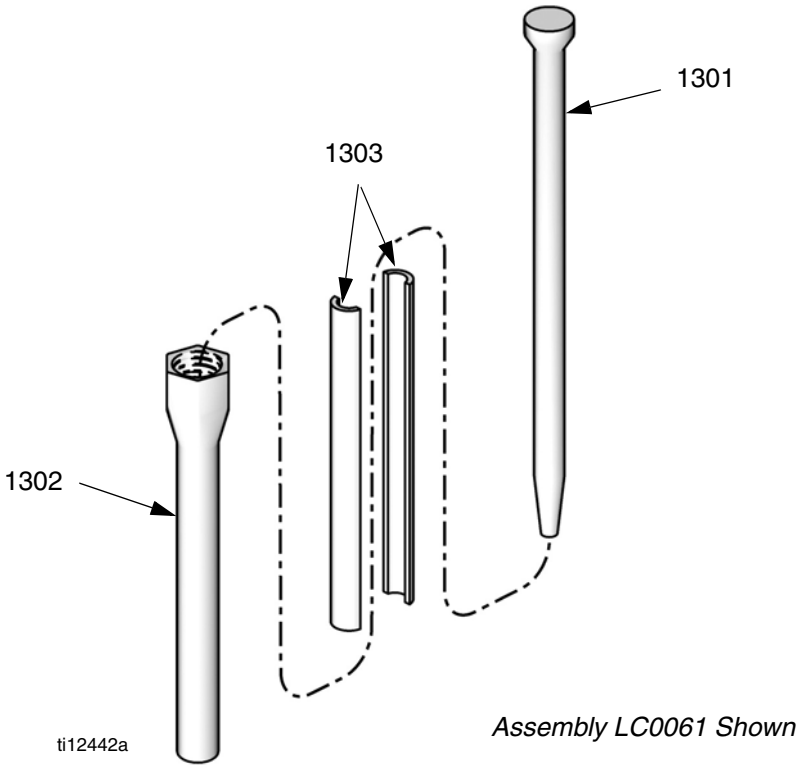

Assembly LC0061 Shown

Mixer Package	Description	Reference Number and Description		
		1301	1302	1303
		Mixer	Shroud	Sleeve
LC0057	1/4 in. X 24	60/0204/50	94/0883-C/98	
LC0058	3/8 in. x 24	60/0200/50	94/0883-D/98	
LC0059	3/8 in. x 36	60/0201/50	94/0883-E/98	
LC0060	3/8 in. combo	60/0202/50	94/0883-E/98	
LC0061	3/16 in. x 32 Luer Lock	60/0212/50	94/0883-L/98	60/0313/97
LC0062	1/4 in. x 24 Luer Lock	60/0209/50	94/0883-M/98	60/0305/97
LC0063	3/16 in. x 32	60/0206/50	94/0884-1/98	
LC0295	1/2 in. x 24	60/0111-1/50	94/0885-36/98	
LC0296	12 in. x 36	60/0117-1/50	94/0885-24/98	
Quantity		10	1	1

Hose Packages

Unheated, Non-Recirculating Hoses

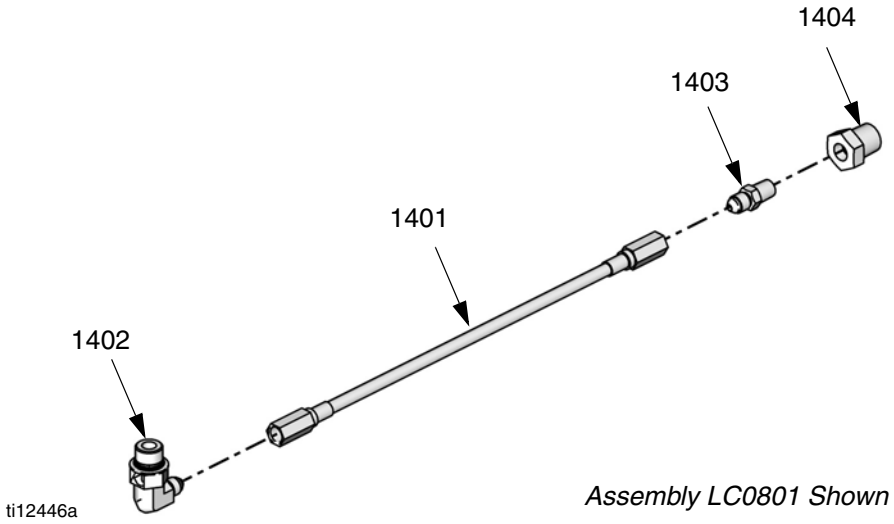

Assembly LC0801 Shown

⚠1 Apply thread sealant tape to male npt threads before assembly.

		Reference Number and Description			
		1401	1402	1403	1404
Hose Package	**Description**	**Hose Assembly**	**90 Deg Elbow**	**Adapter**	**Bushing**
LC0801	3/16 in. x 30 in.	16C501	94/0144-S/25	94/1000/98	94/0488/98
LC0802	3/16 in. x 120 in.	16C506	94/0144-S/25	94/1000/98	94/0488/98
LC0803	3/16 in. x 180 in.	16C507	94/0144-S/25	94/1000/98	94/0488/98
LC0804	1/4 in. x 30 in.	16C510	94/0148-S/25	J6900040	
LC0805	1/4 in. x 120 in.	16C515	94/0148-S/25	J6900040	
LC0806	1/4 in. x 180 in.	16C516	94/0148-S/25	J6900040	
LC0807	3/8 in. x 30 in.	16C519	94/0149-S/25	94/1007/98	
LC0808	3/8 in. x 120 in.	16C524	94/0149-S/25	94/1007/98	
LC0809	3/8 in. x 180 in.	16C525	94/0149-S/25	94/1007/98	
LC0400	3/8 in. x 30 in.	16D261	94/0149-S/25	94/1007/98	
LC401	3/8 in. x 120 in.	16D266	94/0149-S/25	94/1007/98	
LC402	3/8 in. x 180 in.	16D267	94/0149-S/25	94/1007/98	
LC0810	1/2 in. x 30 in.	16C529	94/0150-S/25	94/1009/98	
LC0811	1/2 in. x 120 in.	16C534	94/0150-S/25	94/1009/98	
LC0812	1/2 in. x 180 in.	16C535	94/0150-S/25	94/1009/98	
LC0403	1/2 in. x 30 in.	16D271	94/0150-S/25	16C399	
LC0404	1/2 in. x 120 in.	16D276	94/0150-S/25	16C399	
LC0405	1/2 in. x 180 in.	16D277	94/0150-S/25	16C399	
LC0813	3/4 in. x 120 in.	16C544	94/0153-S/25	94/1083/98	
LC0814	3/4 in. x 180 in.	16C545	94/0153-S/25	94/1083/98	
LC0406	3/4 in. x 120 in.	16D286	94/0153-S/25	94/1083/98	
LC0407	3/4 in. x 180 in.	16D287	94/0153-S/25	94/1083/98	
Quantity		1	1	1	1

Unheated, Recirculating Hose Packages

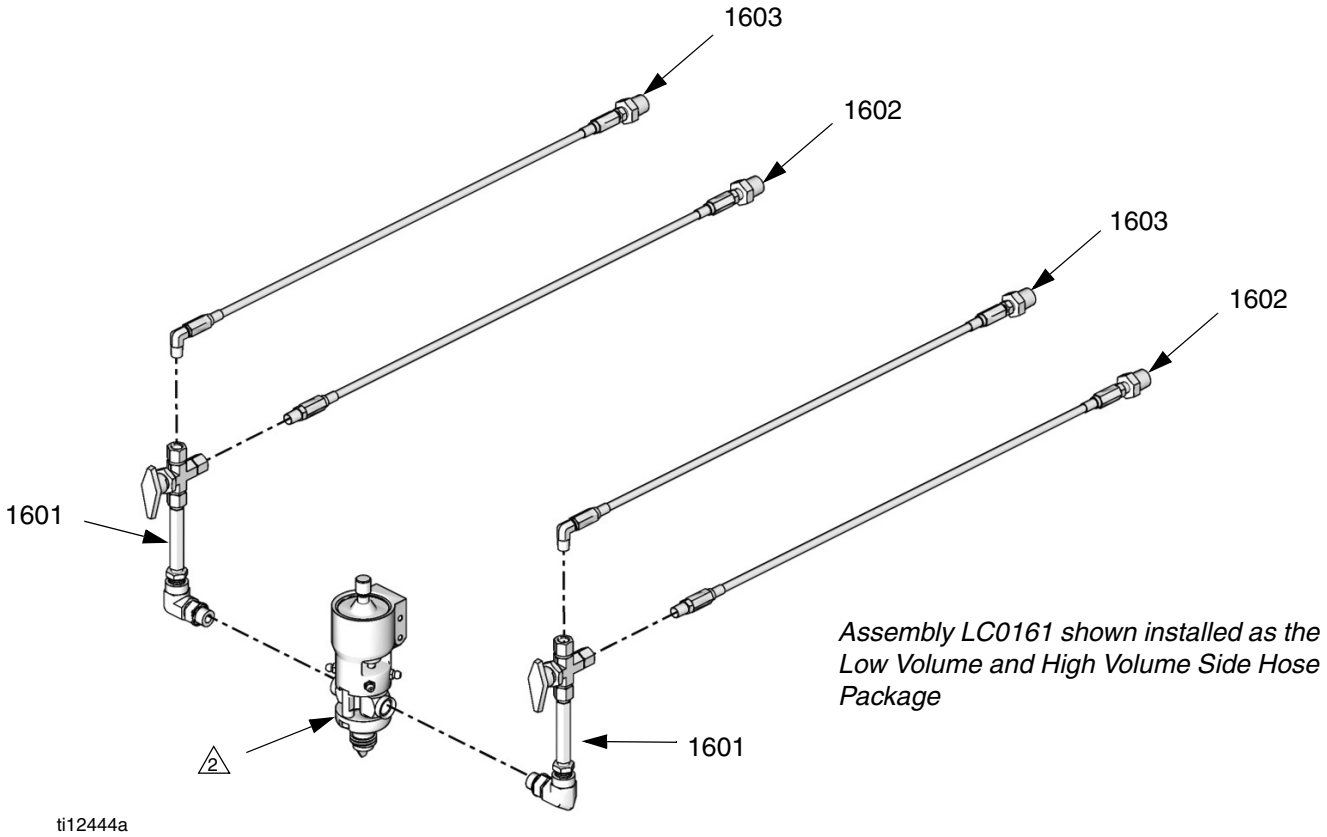

Assembly LC0161 shown installed as the Low Volume and High Volume Side Hose Package

1 Apply thread sealant tape to male npt threads before assembly.

2 Dispense valve shown for reference only.

Hose Package	Description	Reference Number and Description				
		1601	1602	1603	1604	1605
		Valve Assembly	Supply Hose Assembly	Return Hose Assembly	Pressure Sensor	O-Ring
LC0161	3/16 in. x 30 in., on-board	255977	255983	255997	16A093	111457
LC0162	3/16 in. x 120 in., on-board	255977	255984	255998	16A093	111457
LC0163	3/16 in. x 180 in., on-board	255977	255985	255999	16A093	111457
LC0164	1/4 in. x 30 in., on-board	255976	255986	258058	16A093	111457
LC0165	1/4 in. x 120 in., on-board	255976	255987	258059	16A093	111457
LC0166	1/4 in. x 180 in., on-board	255976	255988	258060	16A093	111457
LC0167	3/8 in. x 30 in., on-board	255975	255989	258061	16A093	111457
LC0168	3/8 in. x 120 in., on-board	255975	255990	258062	16A093	111457
LC0169	3/8 in. x 180 in., on-board	255975	255991	258063	16A093	111457
LC0432	3/8 in. x 30 in., on-board, high pressure	255975	LC0408	LC0416	16A093	111457
Quantity		1	1	1	1	1

Hose Package	Description	Reference Number and Description				
		1601	1602	1603	1604	1605
		Valve Assembly	Supply Hose Assembly	Return Hose Assembly	Pressure Sensor	O-Ring
LC0433	3/8 in. x 120 in., on-board, high pressure	255975	LC0409	LC0417	16A093	111457
LC0434	3/8 in. x 180 in., on-board, high pressure	255975	LC0410	LC0418	16A093	111457
LC0170	1/2 in. x 30 in., on-board	255974	255992	258064	16A093	111457
LC0171	1/2 in. x 120 in., on-board	255974	255993	258065	16A093	111457
LC0172	1/2 in. x 180 in., on-board	255974	255994	258066	16A093	111457
LC0435	1/2 in. x 30 in., on-board, high pressure	255974	LC0411	LC0419	16A093	111457
LC0436	1/2 in. x 120 in., on-board, high pressure	255974	LC0412	LC0420	16A093	111457
LC0437	1/2 in. x 180 in., on-board, high pressure	255974	LC0413	LC0421	16A093	111457
LC0173	3/4 in. x 120 in., on-board	255974	255995	258067	16A093	111457
LC0174	3/4 in. x 180 in., on-board	255974	255996	258068	16A093	111457
LC0438	3/4 in. x 120 in., on-board, high pressure	255974	LC0414	LC0422	16A093	111457
LC0439	3/4 in. x 180 in., on-board, high pressure	255974	LC0415	LC0423	16A093	111457
LC0175	3/16 in. x 30 in., off-board	255977	255983	258069	16A093	111457
LC0176	3/16 in. x 120 in., off-board	255977	255984	258070	16A093	111457
LC0177	3/16 in. x 180 in., off-board	255977	255985	258071	16A093	111457
LC0178	1/4 in. x 30 in., off-board	255976	255986	258072	16A093	111457
LC0179	1/4 in. x 120 in., off-board	255976	255987	258073	16A093	111457
LC0180	1/4 in. x 180 in., off-board	255976	255988	258074	16A093	111457
LC0181	3/8 in. x 30 in., off-board	255975	255989	258075	16A093	111457
LC0182	3/8 in. x 120 in., off-board	255975	255990	258076	16A093	111457
LC0183	3/8 in. x 180 in., off-board	255975	255991	258077	16A093	111457
LC0440	3/8 in. x 30 in., off-board, high pressure	255975	LC0408	LC0424	16A093	111457
LC0441	3/8 in. x 120 in., off-board, high pressure	255975	LC0409	LC0425	16A093	111457
LC0442	3/8 in. x 180 in., off-board, high pressure	255975	LC0410	LC0426	16A093	111457
LC0184	1/2 in. x 30 in., off-board	255974	255992	258078	16A093	111457
LC0185	1/2 in. x 120 in., off-board	255974	255993	258079	16A093	111457
LC0186	1/2 in. x 180 in., off-board	255974	255994	258080	16A093	111457
LC0443	1/2 in. x 30 in., off-board, high pressure	255974	LC0411	LC0427	16A093	111457
LC0444	1/2 in. x 120 in., off-board, high pressure	255974	LC0412	LC0428	16A093	111457
Quantity		1	1	1	1	1

Hose Package	Description	Reference Number and Description				
		1601	1602	1603	1604	1605
		Valve Assembly	Supply Hose Assembly	Return Hose Assembly	Pressure Sensor	O-Ring
LC0445	1/2 in. x 180 in., off-board, high pressure	255974	LC0413	LC0429	16A093	111457
LC0187	3/4 in. x 120 in., off-board	255974	255995	258081	16A093	111457
LC0188	3/4 in. x 180 in., off-board	255974	255996	258082	16A093	111457
LC0446	3/4 in. x 120 in., off-board, high pressure	255974	LC0414	LC0430	16A093	111457
LC0447	3/4 in. x 180 in., off-board, high pressure	255974	LC4015	LC0431	16A093	111457
Quantity		1	1	1	1	1

Heated, Recirculating Hose Packages

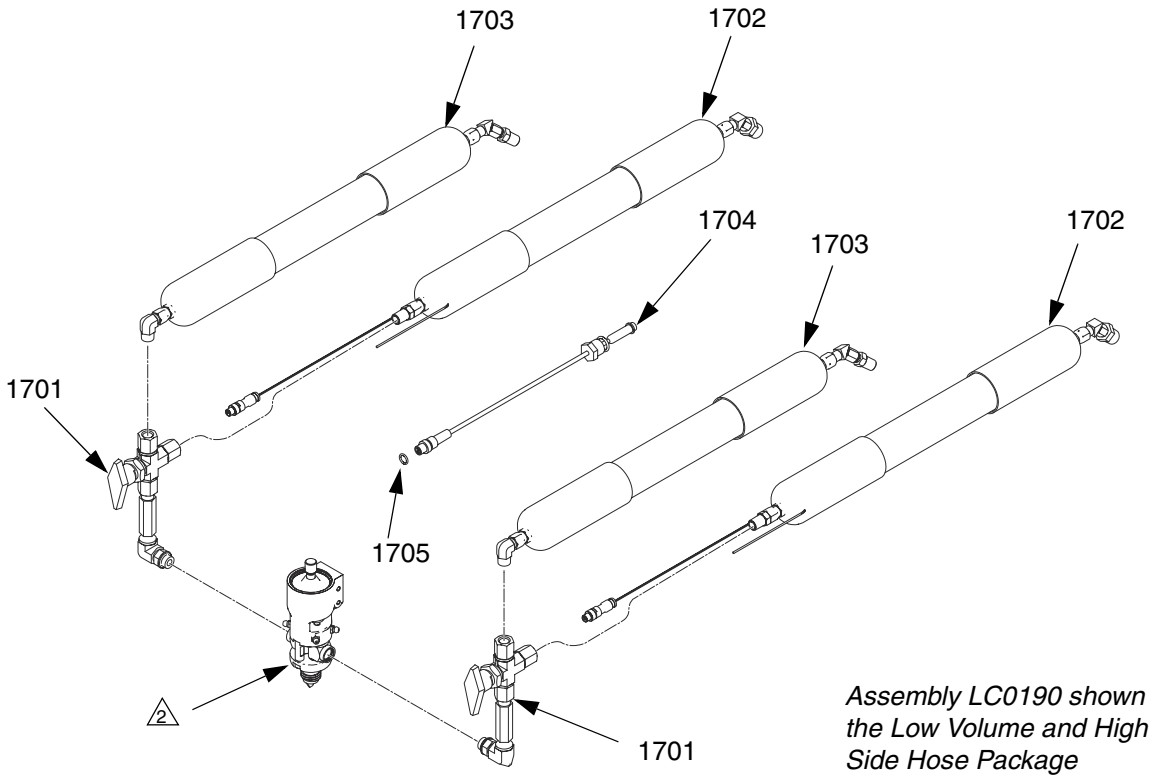

Assembly LC0190 shown installed as the Low Volume and High Volume Side Hose Package

1 Apply thread sealant tape to male npt threads before assembly.

2 Dispense valve shown for reference only.

		Reference Number and Description				
		1701	**1702**	**1703**	**1704**	**1705**
Hose Package	**Description**	**Valve Assembly**	**Heated Supply Hose Assembly**	**Insulated Return Hose Assembly**	**Pressure Sensor**	**O-Ring**
LC0190	1/4 in. x 30 in., on-board	255976	258084	258095	16A093	111457
LC0191	1/4 in. x 120 in., on-board	255976	258085	258096	16A093	111457
LC0192	1/4 in. x 180 in., on-board	255976	258086	258097	16A093	111457
LC0193	3/8 in. x 30 in., on-board	255975	258087	258098	16A093	111457
LC0194	3/8 in. x 120 in., on-board	255975	258088	258099	16A093	111457
LC0195	3/8 in. x 180 in., on-board	255975	258089	258121	16A093	111457
LC0472	3/8 in. x 30 in., on-board, high pressure	255975	258087	LC0456	16A093	111457
LC0473	3/8 in. x 120 in., on-board, high pressure	255975	258088	LC0457	16A093	111457
Quantity		1	1	1	1	1

Hose Package	Description	Reference Number and Description				
		1701	1702	1703	1704	1705
		Valve Assembly	Heated Supply Hose Assembly	Insulated Return Hose Assembly	Pressure Sensor	O-Ring
LC0474	3/8 in. x 180 in., on-board, high pressure	255975	258089	LC0458	16A093	111457
LC0196	1/2 in. x 30 in., on-board	255974	258090	258122	16A093	111457
LC0197	1/2 in. x 120 in., on-board	255974	258091	258123	16A093	111457
LC0198	1/2 in. x 180 in., on-board	255974	258092	258124	16A093	111457
LC0475	1/2 in. x 30 in., on-board, high pressure	255974	258090	LC0459	16A093	111457
LC0476	1/2 in. x 120 in., on-board, high pressure	255974	258091	LC0460	16A093	111457
LC0477	1/2 in. x 180 in., on-board, high pressure	255974	258092	LC0461	16A093	111457
LC0199	3/4 in. x 120 in., on-board	255974	258093	258125	16A093	111457
LC0200	3/4 in. x 180 in., on-board	255974	258094	258126	16A093	111457
LC0478	3/4 in. x 120 in., on-board, high pressure	255974	258093	LC0462	16A093	111457
LC0479	3/4 in. x 180 in., on-board, high pressure	255974	258094	LC0463	16A093	111457
LC0201	1/4 in. x 30 in., off-board	255976	258084	258127	16A093	111457
LC0202	1/4 in. x 120 in., off-board	255976	258085	258128	16A093	111457
LC0203	1/4 in. x 180 in., off-board	255976	258086	258129	16A093	111457
LC0204	3/8 in. x 30 in., off-board	255975	258087	258130	16A093	111457
LC0205	3/8 in. x 120 in., off-board	255975	258088	258131	16A093	111457
LC0206	3/8 in. x 180 in., off-board	255975	258089	258132	16A093	111457
LC0480	3/8 in. x 30 in., off-board, high pressure	255975	258087	LC0464	16A093	111457
LC0481	3/8 in. x 120 in., off-board, high pressure	255975	258088	LC0465	16A093	111457
LC0482	3/8 in. x 180 in., off-board, high pressure	255975	258089	LC0466	16A093	111457
LC0207	1/2 in. x 30 in., off-board	255974	258090	258133	16A093	111457
LC0208	1/2 in. x 120 in., off-board	255974	258091	258134	16A093	111457
LC0209	1/2 in. x 180 in., off-board	255974	258092	258135	16A093	111457
LC0483	1/2 in. x 30 in., off-board, high pressure	255974	258090	LC0467	16A093	111457
LC0484	1/2 in. x 120 in., off-board, high pressure	255974	258091	LC0468	16A093	111457
LC0485	1/2 in. x 180 in., off-board, high pressure	255974	258092	LC0469	16A093	111457
LC0210	3/4 in. x 120 in., off-board	255974	258093	258136	16A093	111457
LC0211	3/4 in. x 180 in., off-board	255974	258094	258137	16A093	111457
LC0486	3/4 in. x 120 in., off-board, high pressure	255974	258093	LC0470	16A093	111457
LC0487	3/4 in. x 180 in., off-board, high pressure	255974	258094	LC0471	16A093	111457
Quantity		1	1	1	1	1

Heated, Non-Recirculating Hoses

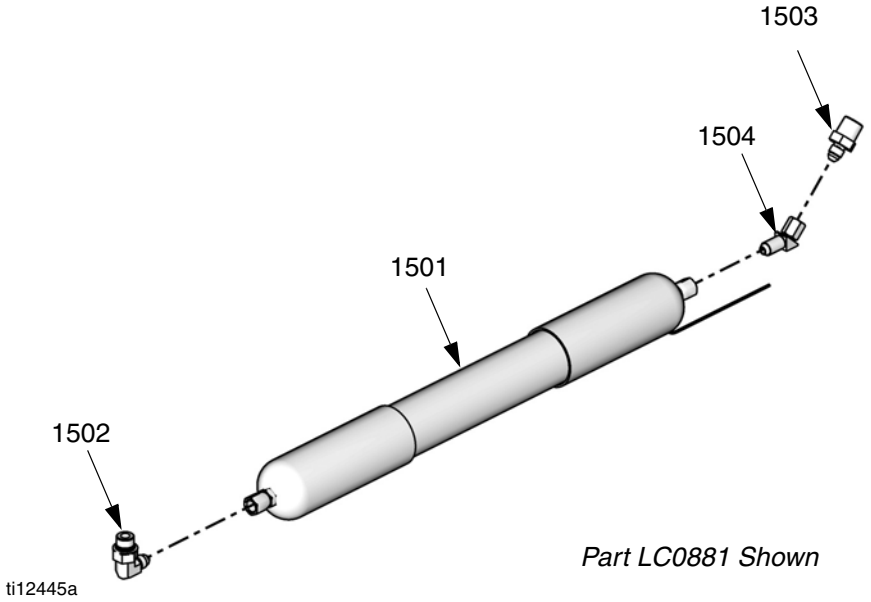

Part LC0881 Shown

⚠1 Apply thread sealant tape to male npt threads before assembly.

		Reference Number and Description					
		1501	1502	1503	1504	* 1505	* 1506
Hose Package	Description	Heated Hose Assembly	90 Degree Elbow	Adapter	45 Degree Elbow	Circuit Breaker	Extension Cord
LC0881	1/4 in. x 30 in.	16C554	94/0148-S/25	J6900040	121041	121630	121683
LC0882	1/4 in. x 120 in.	16C558	94/0148-S/25	J6900040	121041	121632	121683
LC0883	1/4 in. x 180 in.	16C559	94/0148-S/25	J6900040	121041	121633	121683
LC0884	3/8 in. x 30 in.	16C562	94/0149-S/25	94/1007/98	121042	121630	121683
LC0885	3/8 in. x 120 in.	16C566	94/0149-S/25	94/1007/98	121042	121632	121683
LC0886	3/8 in. x 180 in.	16C567	94/0149-S/25	94/1007/98	121042	16E546	121683
LC0887	1/2 in. x 30 in.	16C570	94/0150-S/25	16C399	121043	121630	121683
LC0888	1/2 in. x 120 in.	16C574	94/0150-S/25	16C399	121043	121632	121683
LC0889	1/2 in. x 180 in.	16C575	94/0150-S/25	16C399	121043	16E546	121683
LC0890	3/4 in. x 120 in.	16C582	94/0153-S/25	94/0103/98	121044	121632	121683
LC0891	3/4 in. x 180 in.	16C583	94/0153-S/25	94/0103/98	121044	16E546	121683
Quantity		1	1	1	1	1	1

* *Not shown.*

Power Cords

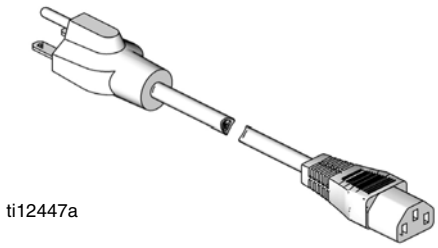

Part 121054 Shown

Power Cord Package	Description
121054	CORD SET, 250V, 10A, United States
121055	CORD SET, 250V, 10A, North America
121056	CORD SET, 250V, 10A, Continental Europe
121057	CORD SET, 250V, 10A, United Kingdom/Ireland
121058	CORD SET, 250V, 10A, Israel
121060	CORD SET, 250V, 10A, India
124861	CORD SET, 250V, 10A, Italy
124862	CORD SET, 250V, 10A, Denmark
124863	CORD SET, 250V, 10A, Switzerland
124864	CORD SET, 250V, 10A, Australia

Flow Monitoring

Flow Monitoring Package	Part Number and Quantity				
	Flow Meters			Pressure Transducer, 257433	Pump Plug, LC0041
	0.5 gpm, LC0299	1.0 gpm, LC0300	2.0 gpm, LC0301		
LC0302	2				1
LC0303	1	1			
LC0304	1		1		
LC0305		2			
LC0306		1	1		
LC0307			2		
LC0312	2			1	
LC0313	1	1			
LC0314	1		1		
LC0315		2			
LC0316		1	1		
LC0317			2		

Pump Plug, Assembly LC0041

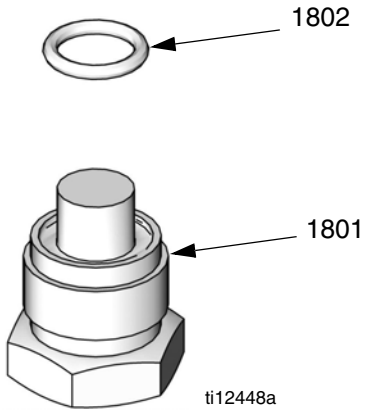

Ref	Part	Description	Qty
1801	15K815	PLUG, dummy, transducer	2
1802	111457	PACKING, o-ring	2

Pressure Transducer, Assembly 257433

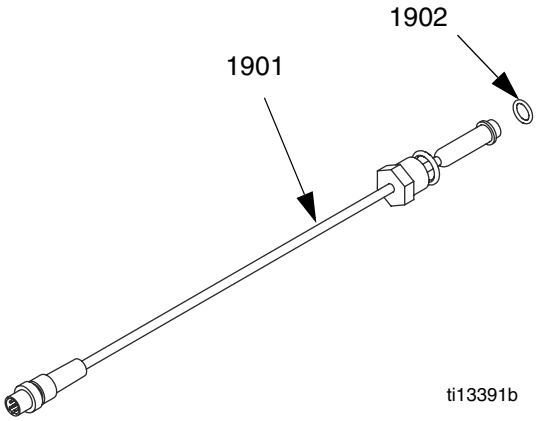

Ref	Part	Description	Qty
1901	16A093	SENSOR, pressure	2
1902	111457	O-RING	2

Flow Meters

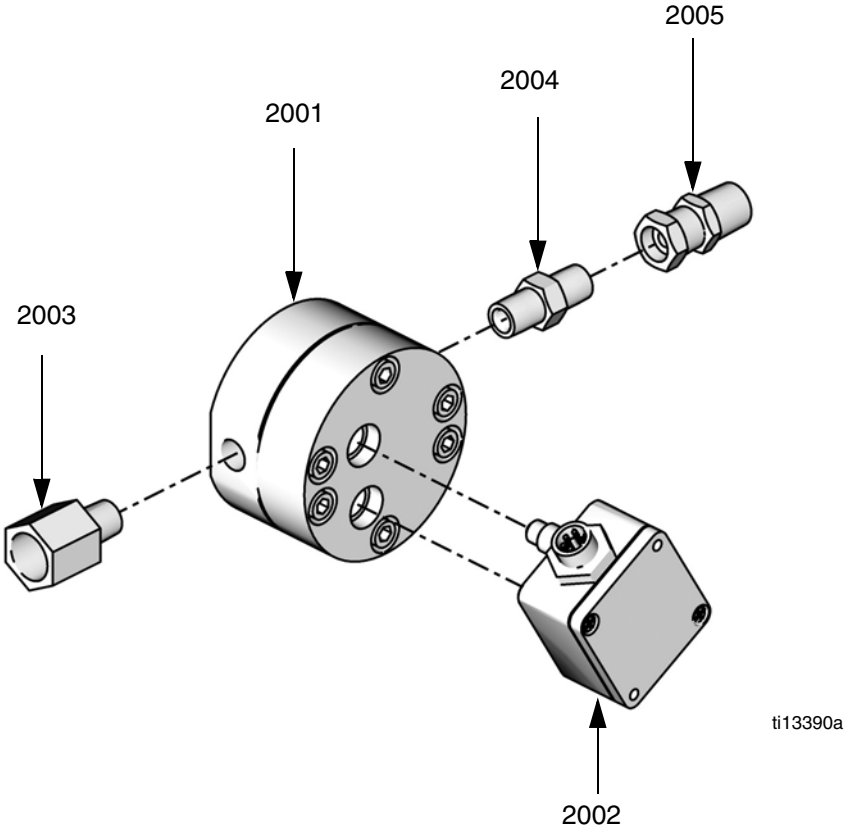

Ref	Description	0.5 gpm Flow Meter Assy, LC0299	1.0 gpm Flow Meter Assy, LC0300	2.0 gpm Flow Meter Assy, LC0301	Qty
2001	METER, flow	121932	121933	121934	1
2002	SENSOR, meter, flow	121909			1
2003	ADAPTER, reducer	94/0745/98			1
2004	FITTING, nipple, hex	121907			1
2005	FITTING, adapter	121908			1

Tank Stands, Assemblies LC0247 and LC0103

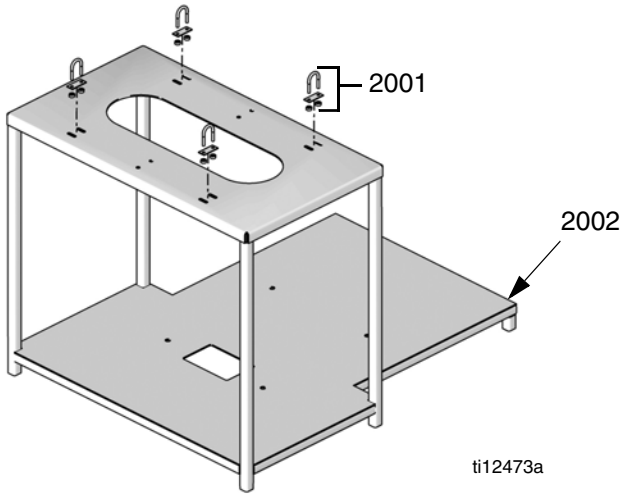

Assembly LC0247 Shown

Ref	Part	Description	Qty
2001	121097	FASTENER, u-bolt with mounting plate	4
2002	15U373	SUPPORT, tank stand, variable ratio (assembly LC0247 only)	1
	15M478	SUPPORT, off-board tank stand (assembly LC0103 only)	1

Heat Zone Assemblies

See Integrated Heat manual referenced at the beginning of this manual for Heat Zone Assemblies parts information.

Kits

Mixer and Shroud Options

Part	Description
LC0063	Mixer, 3/16 in. (6.5 mm) x 32, 10 Mixers with shroud
LC0057	Mixer, 1/4 in. (6.5 mm) x 24, 10 Mixers with shroud
LC0058	Mixer, 3/8 in. (9.8 mm) x 24, 10 Mixers with shroud
LC0059	Mixer, 3/8 in. (9.8 mm) x 36, 10 Mixers with shroud
LC0060	Mixer, 3/8 in. (9.8 mm) Combo, 10 Mixers with shroud
LC0061	Mixer, 3/16 in. (4.8 mm) x 32 Luer Lock, 10 Mixers with shroud
LC0062	Mixer, 1/4 in. (6.5 mm) x 24 Luer Lock, 10 Mixers with shroud
LC0077	Mixer, 3/16 in. (4.8 mm) x 32, 50 Mixers
LC0078	Mixer, 1/4 in. (6.5 mm) x 24, 50 Mixers
LC0079	Mixer, 3/8 in. (9.8 mm) x 24, 50 Mixers
LC0080	Mixer, 3/8 in. (9.8 mm) x 36, 50 Mixers
LC0081	Mixer, 3/8 in. (9.8 mm) combo, 50 Mixers
LC0083	Mixer, 1/4 in. (6.5 mm) x 24 Luer Lock, 50 Mixers
LC0082	Mixer, 3/16 in. (4.8 mm) x 32 Luer Lock, 50 Mixers
LC0084	Mixer, 3/16 in. (4.8 mm) x 32, 250 Mixers
LC0085	Mixer, 1/4 in. (6.5 mm) x 24, 250 Mixers
LC0086	Mixer, 3/8 in. (9.8 mm) x 24, 250 Mixers
LC0087	Mixer, 3/8 in. (9.8 mm) x 36, 250 Mixers
LC0088	Mixer, 3/8 in. (9.8 mm) combo, 250 Mixers
LC0089	Mixer, 3/16 in. (4.8 mm) x 32 Luer Lock, 250 Mixers
LC0090	Mixer, 1/4 in. (6.5 mm) x 24 Luer Lock, 250 Mixers

MD2 Valve Kits

See MD2 Dispense Valve instruction manual referenced at the beginning of this manual for installation instructions or for more information.

Part	Description
255217	MD2, kit rebuild, air cylinder
255218	MD2, kit rebuild, back-end of wet section (no needle or seat)
255219	MD2, Soft Seat rebuild, needle and nose
255220	MD2, convert Soft Seat nose to Hard Seat (Hard Seat rebuild), needle and nose

Machine Rebuild Kits

Part	Description
LC0091	3.0 in. Air Cylinder rebuild kit
LC0092	4.5 in. Air Cylinder rebuild kit
LC0093	Check Valve rebuild kit, Stainless Steel Ball
LC0318	Check Valve rebuild kit, Carbide Ball
LC0094	Rear Pump Seal rebuild kit

Tank Accessories

Part	Description
LC0097	Desiccant Dryer, 3/8 in. NPT with adapter and cartridge
LC0098	Desiccant Dryer refill cartridge
◆LC0095	Nitrogen Harness Kit for 30 L and 60 L tank, 1 tank
◆LC0096	Nitrogen Harness Kit for 30 L and 60 L tank, 2 tanks
†LC0099	Vacuum Transfer Pump, 120V, down to 25 Torr
†LC0100	Vacuum Transfer Pump, 240V, down to 25 Torr

† Item includes only the pump. A vacuum kit must be purchased to install the pump onto the tank.

◆ Kit includes all parts needed to connect a nitrogen tank to the material tank.

Vacuum Kits

These vacuum kits contain the parts necessary to attach a vacuum pump to the tanks.

On-Board Vacuum Kits

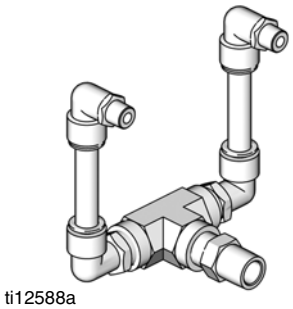

Assembly 256206 Shown

Off-Board Vacuum Kits

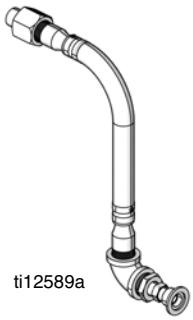

Assembly 256207 Shown

Part	Description
256205	Vacuum Kit, Single On-Board Tank
256206	Vacuum Kit, Two On-Board Tanks
256207	Vacuum Kit, Single Off-Board Tank
256208	Vacuum Kit, Two Off-Board Tanks

Refill Kits

Refill Kits 256659 and 256660 are designed to turn on and off a transfer pump as needed to keep the tanks at the proper fluid level. Tank Refill Kit 256577 is designed to open and close a valve to allow fluid to flow into the tank from an always-on transfer pump. Tank Refill Kit 256577 includes the parts necessary to install on the base or lid of a 7.5 L, 30 L, or 60 L tank.

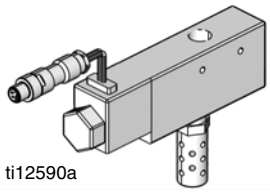

Assembly 256659 Shown

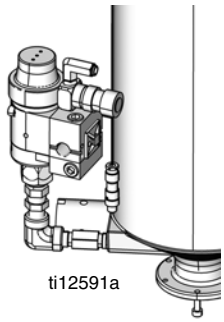

Assembly 256577 shown installed on tank for reference

Part	Description
256659	Refill Kit, 1/4 npt, solenoid, 24V
256660	Refill Kit, 1/2 npt, solenoid, 24V
256577	Tank Refill Kit

External Control Interface Connection Kit

Part	Description
LC0008	Cord, I/O interface and splitter

Dimensions

Machine with On-Board Tanks

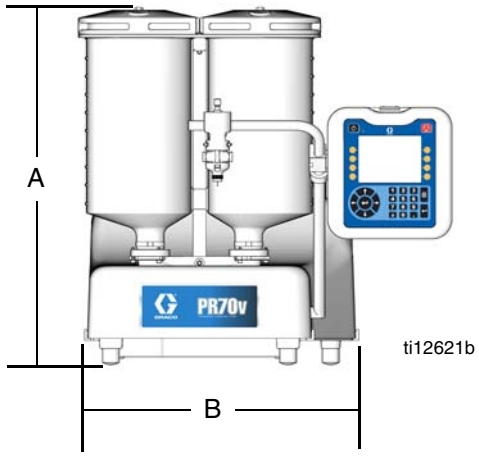

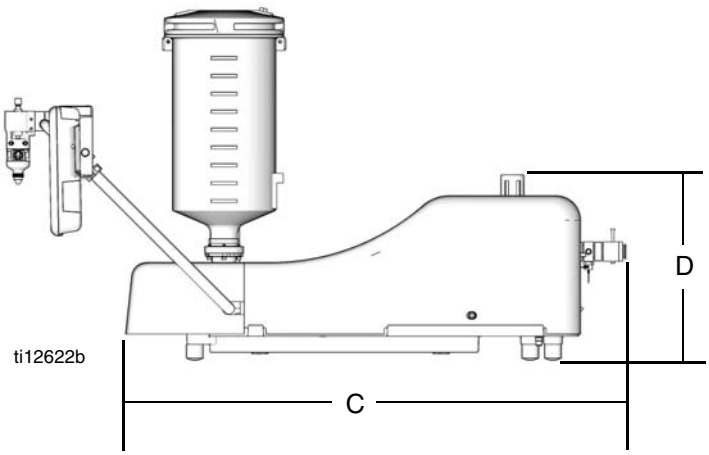

PR70

Ref	† Assembly Dimensions, in. (mm)				
	Polyethylene Tanks		◆ Stainless Steel Tanks		
	No Agitators	With Agitators	3 L	7.5 L, No Agitators	7.5 L, with Agitators
A	26.4 (670)	38.6 (980)	28.2 (716)	38.2 (970)	39.9 (1013)
B	18.5 (470)	18.5 (470)	15.5 (394)	15.5 (394)	15.5 (394)
C	30.6 (778)	30.6 (778)	30.6 (778)	30.6 (778)	30.6 (778)
D	13.4 (340)	13.4 (340)	13.4 (340)	13.4 (340)	13.4 (340)

PR70v

Ref	† Assembly Dimensions, in. (mm)				
	Polyethylene Tanks		◆ Stainless Steel Tanks		
	No Agitators	With Agitators	3 L, No Agitators	7.5 L, No Agitators	7.5 L, with Agitators
A	30.0 (762)	39.4 (1001)	29.0 (737)	39.0 (991)	40.6 (1031)
B	20.9 (531)	20.9 (531)	20.9 (531)	20.9 (531)	20.9 (531)
C	38.6 (980)	38.6 (980)	38.6 (980)	38.6 (980)	38.6 (980)
D	14.3 (363)	14.3 (363)	14.3 (363)	14.3 (363)	14.3 (363)

† Assembly dimensions listed are maximum for all assemblies under the given title.

◆ On-board stainless steel tank dimensions include ball valves and vacuum de-gas in maximum height calculation.

Machine with Off-Board Tanks

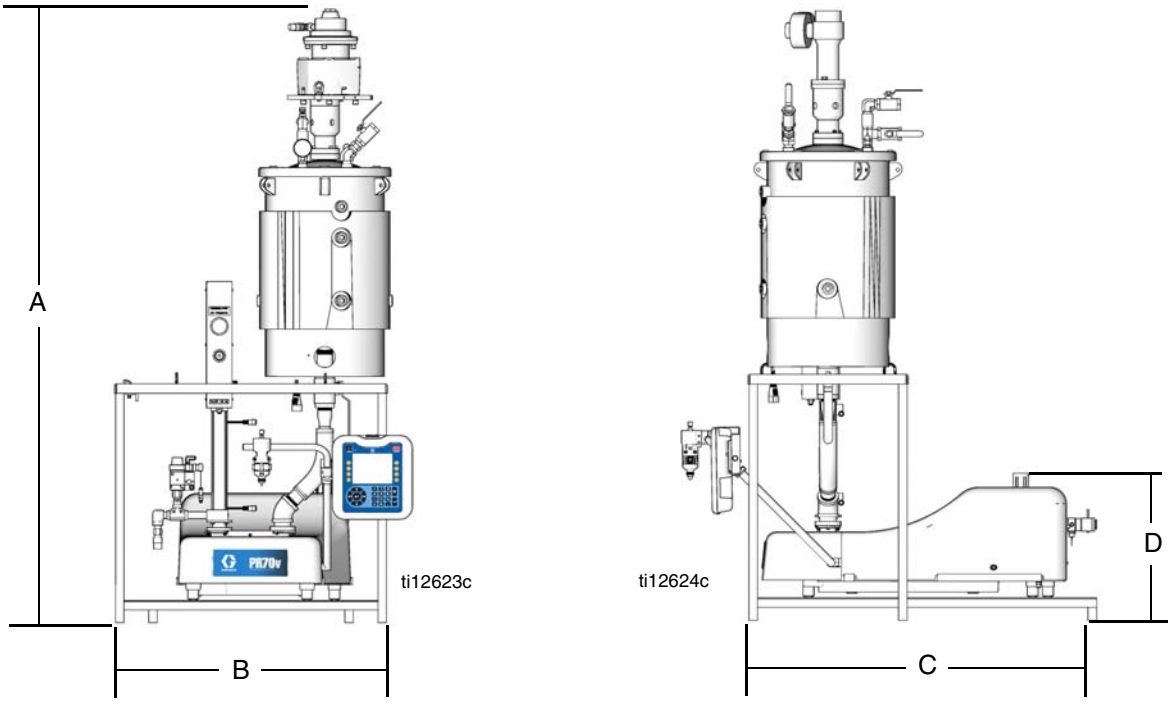

PR70

Ref	† Assembly Dimensions, in. (mm)			
	30 L Tank		60 L Tank	
	No Agitators	With Agitators	No Agitators	With Agitators
A	75.7 (1923)	83.4 (2118)	64.9 (1648)	89.5 (2273)
B	32.1 (815)	32.1 (815)	32.1 (815)	32.1 (815)
C	29.3 (236)	29.3 (236)	29.3 (236)	29.3 (236)
D	16.0 (406)	16.0 (406)	16.0 (406)	16.0 (406)

PR70v

Ref	† Assembly Dimensions, in. (mm)			
	30 L Tank		60 L Tank	
	No Agitators	With Agitators	No Agitators	With Agitators
A	75.7 (1923)	83.4 (2118)	64.9 (1648)	89.5 (2273)
B	32.1 (815)	32.1 (815)	32.1 (815)	32.1 (815)
C	40.1 (1019)	40.1 (1019)	40.1 (1019)	40.1 (1019)
D	17.0 (432)	17.0 (432)	17.0 (432)	17.0 (432)

† Assembly dimensions listed are maximum for all assemblies under the given title.

Technical Data

Metering Pump Effective Area	80 to 960 mm^2 (0.124 to 1.49 $in.^2$) per side
Small Air Cylinder Effective Area	4560 mm^2 (7.07 $in.^2$)
Large Air Cylinder Effective Area	10260 mm^2 (15.9 $in.^2$)
Maximum Stroke Length	38.1 mm (1.50 in.)
Minimum Stroke Length	5.8 mm (0.23 in.)
Volume per Cycle	2 to 70 cc (0.12 to 4.3 $in.^3$)
Pump Cycles per 1 L (0.26 gal)	14.3 to 500 cycles (varies by piston size)
Ratios (fixed)	1:1 to 12:1 (depending upon cylinders selected)
Maximum Fluid Working Pressure	3000 psi (20.7 MPa, 207 bar)
Maximum Air Input Pressure	100 psi (0.7 MPa, 7 bar)
Maximum Cycle Rate	30 cycles per minute
Maximum Operating Temperature	70°C (160°F), nylon pistons 50°C (120°F) UHMWPE pistons or PE Tanks
Air Inlet Size	1/4 NPT female
Pump Fluid Outlet Size	-03, -04, -06, -08 or –12 JIC fittings for 3/16 in. (4.8 mm), 1/4 in. (6.4 mm), 3/8 in. (9.5 mm), 1/2 in. (12.7 mm), 3/4 in. (19.1 mm) hoses
Wetted Parts	303/304, 17-4 PH, hard chrome, Chromex™, carbide, Chemical Resistant O-rings, PTFE, nylon, UHMWPE
Weight	55 kg (120 lb) typical with two 7.5 L tanks 150 kg (330 lb) typical with two 60 L tanks
Sound Pressure Level (at typical operator station for machine mounted Dispense Valve)	82 dBA
Compressed Air	Less than 10 scfm typical (varies with cycle times)
Electrical Power	• 100-240V 50/60Hz, 1 phase for machine – 80 Watts • 208-240V 50/60Hz, 1 phase for heat – 11 kW max • 120 or 240 VAC 50/60Hz 1 phase for on-board agitators, 80 Watts • 240 VAC 50/60Hz 1 phase for off-board agitators, 600 Watts

Graco Standard Warranty

Graco warrants all equipment referenced in this document which is manufactured by Graco and bearing its name to be free from defects in material and workmanship on the date of sale to the original purchaser for use. With the exception of any special, extended, or limited warranty published by Graco, Graco will, for a period of twelve months from the date of sale, repair or replace any part of the equipment determined by Graco to be defective. This warranty applies only when the equipment is installed, operated and maintained in accordance with Graco's written recommendations.

This warranty does not cover, and Graco shall not be liable for general wear and tear, or any malfunction, damage or wear caused by faulty installation, misapplication, abrasion, corrosion, inadequate or improper maintenance, negligence, accident, tampering, or substitution of non-Graco component parts. Nor shall Graco be liable for malfunction, damage or wear caused by the incompatibility of Graco equipment with structures, accessories, equipment or materials not supplied by Graco, or the improper design, manufacture, installation, operation or maintenance of structures, accessories, equipment or materials not supplied by Graco.

This warranty is conditioned upon the prepaid return of the equipment claimed to be defective to an authorized Graco distributor for verification of the claimed defect. If the claimed defect is verified, Graco will repair or replace free of charge any defective parts. The equipment will be returned to the original purchaser transportation prepaid. If inspection of the equipment does not disclose any defect in material or workmanship, repairs will be made at a reasonable charge, which charges may include the costs of parts, labor, and transportation.

THIS WARRANTY IS EXCLUSIVE, AND IS IN LIEU OF ANY OTHER WARRANTIES, EXPRESS OR IMPLIED, INCLUDING BUT NOT LIMITED TO WARRANTY OF MERCHANTABILITY OR WARRANTY OF FITNESS FOR A PARTICULAR PURPOSE.

Graco's sole obligation and buyer's sole remedy for any breach of warranty shall be as set forth above. The buyer agrees that no other remedy (including, but not limited to, incidental or consequential damages for lost profits, lost sales, injury to person or property, or any other incidental or consequential loss) shall be available. Any action for breach of warranty must be brought within two (2) years of the date of sale.

GRACO MAKES NO WARRANTY, AND DISCLAIMS ALL IMPLIED WARRANTIES OF MERCHANTABILITY AND FITNESS FOR A PARTICULAR PURPOSE, IN CONNECTION WITH ACCESSORIES, EQUIPMENT, MATERIALS OR COMPONENTS SOLD BUT NOT MANUFACTURED BY GRACO. These items sold, but not manufactured by Graco (such as electric motors, switches, hose, etc.), are subject to the warranty, if any, of their manufacturer. Graco will provide purchaser with reasonable assistance in making any claim for breach of these warranties.

In no event will Graco be liable for indirect, incidental, special or consequential damages resulting from Graco supplying equipment hereunder, or the furnishing, performance, or use of any products or other goods sold hereto, whether due to a breach of contract, breach of warranty, the negligence of Graco, or otherwise.

FOR GRACO CANADA CUSTOMERS
The Parties acknowledge that they have required that the present document, as well as all documents, notices and legal proceedings entered into, given or instituted pursuant hereto or relating directly or indirectly hereto, be drawn up in English. Les parties reconnaissent avoir convenu que la rédaction du présente document sera en Anglais, ainsi que tous documents, avis et procédures judiciaires exécutés, donnés ou intentés, à la suite de ou en rapport, directement ou indirectement, avec les procédures concernées.

Graco Information

For the latest information about Graco products, visit www.graco.com.

TO PLACE AN ORDER, contact your Graco distributor or call to identify the nearest distributor.
Toll Free: 1-800-746-1334 **or Fax:** 330-966-3006.

All written and visual data contained in this document reflects the latest product information available at the time of publication. Graco reserves the right to make changes at any time without notice.

For patent information, see www.graco.com/patents.

Original instructions. This manual contains English. MM 312760

Graco Headquarters: Minneapolis
International Offices: Belgium, China, Japan, Korea

GRACO INC. AND SUBSIDIARIES • P.O. BOX 1441 • MINNEAPOLIS MN 55440-1441 • USA

Copyright 2008, Graco Inc. All Graco manufacturing locations are registered to ISO 9001.
www.graco.com
Revised February 2014